TECHNOLOGY THAT ROCKS THE CRADLE:

INTRODUCING ARTIFICIAL INTELLIGENCE AWARENESS

by

NING YANG

MICHELLE CARTER, COMMITTEE CHAIR
GREGORY BOTT, COMMITTEE CO-CHAIR
JASON THATCHER
JASON PARTON
ANNIE TIAN

A DISSERTATION

Submitted in partial fulfillment of the requirements
for the degree of Doctor of Philosophy
in the Department of Information Systems, Statistics, and Management Science
in the Graduate School of
The University of Alabama

TUSCALOOSA, ALABAMA

2022

Copyright by Ning Yang 2022

ALL RIGHTS RESERVED

ABSTRACT

There is increasing attention and interest being paid to artificial intelligence (AI). We can see AI applications in our everyday lives, including web search engines, recommendation systems, devices understanding human speech or input, self-driving cars, and automated decision-making systems ("Artificial intelligence" 2022). The extensive uses of AI cover all aspects of our lives. As we enter the era of cloud computing, the power of AI has been accelerated. We enjoy more customized information feeds AI provides, and it allows organizations to make smarter and faster decisions on a larger scale (Accenture 2022).

There has been a variety of research investigating AI, its goals, and its uses as a tool in the field of IS. However, to our knowledge, no prior research has addressed people's perception of the existence of AI and AI's influences on our decisions. Although we choose to use AI to help us make better decisions, we need to reflect on how we perceive AI, its purpose, its practice, and its impacts on our decisions and our behaviors associated with its use.

In this two-essay dissertation, we accomplish two primary goals. First, in Essay One, we propose the new concept of Artificial Intelligence Awareness (AIA), demonstrate how it can be applied to many subareas of IS, and develop several opportunities for future research related to AI uses. Second, in Essay Two, we develop the measure to capture AIA and test the model to show how it impacts thoughts, emotions, and even behaviors related to AI-powered smart technology uses in the context of the virtual assistant.

DEDICATION

This dissertation is dedicated to everyone who helped and guided me through the trials and tribulations of creating this manuscript. In particular, my parents, husband, and children stood by me throughout and always believed in me.

LIST OF ABBREVIATIONS AND SYMBOLS

>	Greater than
<	Less than
=	Equal to
α	Cronbach's index of internal consistency
AI	Artificial intelligence
AIA	Artificial Intelligence Awareness
AR	Affective reactions in the AIA model
AVE	Average variance extracted: a measure of the amount of variance that is captured by a construct in relation to the amount of variance due to measurement error
BR	Behavioral reactions in the AIA model
CFA	Confirmatory factor analysis: to test whether the measure of a construct is consistent with a researcher's understanding of the nature of that construct
CR	(1) Composite reliability/construct reliability or (2) cognitive reactions in the AIA model
Df	Degree of freedom: number of values free to vary after certain restrictions have been placed on the data
F	Fisher's F ratio: A ratio of two variances
HOC	Higher-order construct
IS	Information Systems
IT	Information technologies
LOC	Lower-order construct
M	Mean
MTurk	Amazon Mechanical Turk

N	Sample size
p	Probability associated with the occurrence under the null hypothesis of a value as extreme as or more extreme than the observed value
PLS	Partial least squares
r	Pearson product-moment correlation
R-squared	Coefficient of determination: the proportion of variance in the dependent variable that is predicted from the independent variable
SA	Situation awareness
SEM	Structural equation model
t	Computed value of t-test
VIF	Variance inflation factor: a measure of the amount of multicollinearity in a set of multiple regression variables.

ACKNOWLEDGEMENTS

I am pleased to have this opportunity to thank the many colleagues, friends, family, and faculty members who have helped me with this research project. I am deeply indebted to Drs. Michelle Carter and Jason Thatcher for their sharing of their research expertise and wisdom throughout this process. They are the best academic advisors that I could ever ask for. They nurture me, helping me grow as a researcher, and put up with my stress and my moaning when I lose faith in myself. I would like to thank Dr. Gregory Bott for stepping up and taking the co-chair position two years ago. I am grateful for his kindness in doing it despite his busy schedule.

I would also like to thank my important committee members, Drs. Jason Parton and Annie Tian, for their invaluable input, inspiring questions, and support of both the dissertation and my academic process. Besides being committee members, they are both good friends outside of work. I would like to thank Drs. Uzma Raja and John Correia for their input and support, especially at the beginning of my dissertation writing.

I would certainly be remiss not to mention and sincerely thank my fellow graduate students, Drs. Teagen Nabity-Grover, Tripti Sigh, and Qing Xiao. Without their help, support, and encouragement, this research and dissertation could not have happened. I genuinely miss the days with you all in our office at BD317. I also want to extend my appreciations to other fellow graduate students: Dr. Mosab Alqurashi, Mohammed Alzahrani, Jing Li, and Hung Tong.

This research would not have been possible without the support of my wonderful family. I am so blessed to have my parents, Suyang Yang and Wanping Zhu; my husband, Thomas; and my children, Alan and Danni Grace by my side during this process. Finally, I sincerely thank all of the people in the ISM Department and the Institute of Data and Analytics at the University of Alabama. It has been a pleasure and honor to work with them.

CONTENTS

LIST OF TABLES

LIST OF FIGURES

INTRODUCTION

People behave differently when watched (Andrejevic 2002; McCarney et al. 2007; Nettle et al. 2013). For example, researchers of the Hawthorne Effect found that being watched increased productivity in the Western Electrical Company's Hawthorne Works in Chicago during the 1920s and 30s (McCarney et al. 2007). When workers knew that they were watched, they felt singled out and important, which resulted in increased productivity. Later, researchers discovered that even a picture of watching eyes could change people's behaviors, significantly increasing the probability of donating (Nettle et al. 2013).

Contemporary technologies have introduced new ways to watch people's behaviors, from monitoring their search for the nearest restaurant to revealing their preferences by analyzing their searches for goods on Amazon. Some people may have already noticed that they see an advertisement or promotion information about a specific product after they mention it to their friends or their families. Many smart technologies automatically and ubiquitously produce digital traces of behaviors such as logs or search history, as well as of opinions, such as by recording conversations or requests (Reigeluth 2014). This data is gathered by popular technologies such as a smart speaker in the room, a smartphone in the pocket, or even chatting applications on a tablet. Those smart technologies enable listening, watching, and changing the everyday lives of their users.

In this stream of research, we are interested in understanding how people act when they are aware that smart technologies, especially AI-powered smart technologies, are listening to or supporting them. We investigate people's responses to AI-powered smart technologies that monitor, support, and report on their behaviors. Specifically, we are interested in understanding people's perceptions and whether AI-powered smart technologies change their technology use

decisions and behaviors, such as whether they are more or less aware of AI-powered smart technologies are in the environment, whether their awareness changes according to the situation. We seek to understand people's reactions towards AI-powered smart technology uses when they are aware that devices observe, report on, interrupt, or change their behavioral patterns.

In this dissertation, we propose two essays that conceptually define Artificial Intelligence Awareness (AI awareness or AIA), offer a conceptual measure, and develop a model to test its relationships with other related constructs we have identified in the studies. Table 1 contains the summary of the essays.

Table 1. Summary of Essays

Title	Research Question	Contribution
Technology that rocks the cradle: Introducing Artificial Intelligence Awareness	1. What is artificial intelligence awareness (AIA)? 2. What are the components/dimensions of AIA? 3. What happens to people when they are at different levels of AIA?	1. Based on situation awareness (Endsley 1995), we propose a new construct that helps us understand how people perceive AI-powered smart technologies in different situations. 2. We demonstrate the application of AIA by presenting the AIA model in the context of virtual assistants.
AIA: A measure and empirical investigation of its model and related constructs	1. How do we capture peoples' AIA? 2. How does people's AIA vary across different situations? 3. What is the relationship between AIA and people's reactions after they experience an incident caused by a virtual assistant?	1. We develop a measure to capture AIA. 2. We extend situation awareness beyond the work environment and investigate AIA and its model in different situations. 3. With the support of the data, we show that people's AIA changes from one situation to another.

The first essay in the dissertation defines AIA, its dimensions, and the nomological net, which it integrates into existing theories and constructs tied to technology uses. We view AIA as a special form of situation awareness (Endsley 1995) and investigate its impacts and influences in the context of AI technologies. We also develop a variance model and associated propositions in the first essay.

The second essay builds upon the conceptualization of AIA from the first essay. We develop a measure to capture AIA and its three dimensions. With the help of the AIA measure, we are able to collect data on people's AIA in different situations. The data reveals that there are differences in people's AIA in different situations. We included three reactions in the AIA model: cognitive reaction, affective reaction, and behavioral reaction. We find that people's reactions towards AI-powered smart technologies vary according to the situation. Overall, the second essay provides empirical evidence for AIA and its model.

TECHNOLOGY THAT ROCKS THE CRADLE: INTRODUCING ARTIFICIAL INTELLIGENCE AWARENESS

It is 10:30 a.m. Anna leaves her house to get her groceries through drive-up services. Her phone beeps as soon as she gets into the driver's seat. She takes out her phone, wondering whether she has a message from her colleague. On the screen, a notification shows that it will take 10 minutes to get to her favorite supermarket, with a suggestion of the best route to get there. Just as she pulls into the parking lot, her phone chimes again. It is a greeting from the supermarket. The message notifies her that her drive-up order is ready, and the employee is bringing her groceries to her car. It is almost like magic that her phone knows her schedule, and the store knows her location.

Many people have experiences similar to Anna's. While some people know explicitly that the location-tracking features of their phones are on, others might not notice the location-tracking feature until they receive driving route suggestions. After realizing that the location-tracking feature is on, some choose to turn it off due to privacy concerns. Others are not bothered by this feature because they want to be timely. From these examples, we see that people have different relationships with technology: some are comfortable with technologies monitoring them, whereas some are not. Forty-six percent of teenage app users turn off location-tracking features (Zickuhr 2013). Individuals react differently regarding technologies' roles in and impacts on their lives.

This study explores whether people know and how they perceive the fact that IT is listening to, monitoring, influencing, and interacting with them. IT not only mediates people's lives; it constitutes their lives (Burrows 2009). Information becomes a part of how people live, how they do things, how they are treated, what they encounter, and their way of life (Beer 2009). For example, weather information helps to determine what they wear and how they get to work.

Digital coupons help them to decide where to eat or shop. Their online profiles suggest whom they should date.

Meanwhile, IT also causes problems such as stress, Internet addictions, and digital distractions (Chen et al. 2020). Digital distractions at work, such as receiving and sending personal emails, or in the classroom, such as browsing on social networks, can lead to poor performance and can even cause legal issues (Blanchard and Henle 2008; Chen et al. 2020). Another problem is one's digital footprint. As people spend more and more time on their devices, they leave a trail of data behind them on the Internet ("Digital footprint" 2022). By interacting with these devices, one produces passive digital footprints. The data one produces unintentionally are collected by those devices for various purposes. Technology companies may use or sell the data collected without explicitly notifying their users, which causes privacy issues.

We have recognized the effects of technology penetration and seek to understand whether people change their decisions or alter their behaviors when they realize that technologies observe, report on, interrupt, or change their behavioral patterns. The term *digitalization* also describes the phenomenon of technology penetrating society and depicts the changes caused by the connection among individuals, businesses, and things (Bharadwaj et al. 2013). The term further relates to how technology profoundly impacts people's everyday lives (Püschel et al. 2016).

In this study, we narrow our focus to how AI-powered smart technology affects people's decisions or behaviors. According to Beer (2009), smart technology not only gathers and holds information but also uses it in various ways. For instance, people use virtual assistants to retrieve information; they use smart doorbells to talk to delivery people; they use smart thermometers to control the temperature even while away. Smart technologies are interesting

because it has become difficult to distinguish between the self and the technology since such "ubiquitous computing leaves you feeling as though you did it yourself" (Weiser 1993).

People nowadays use technology at an extensive level. Many aspects of their lives heavily depend on it. Smart technologies become an inevitable part of their lives, sometimes without their conscious acknowledgment. However, as there are many different types of smart technologies and the definition is broad, we narrow our attention to AI-powered smart technologies. These technologies have defining characteristics: an artificial intelligence component, a machine learning component, or some pre-set conditions (Sun 2019). We investigate people's awareness of the increasingly popular smart technology, AI-powered smart technology, due to its growing ubiquity and invisibility.

We pursue several research objectives regarding AI Awareness (AIA). Our first research objective is to define and situate AIA within sociotechnical systems. First, we seek to define AIA, answering the question of *what AI Awareness is*. Second, we seek to theoretically understand people and their awareness of AI, by identifying *the components of AIA*. Third, we seek to explore the outcomes in AIA, by examining *what happens when people are at different levels of AIA*.

Our second research objective is to develop a rich understanding of AIA in the context of technology use. As stated before, our focus is on a particular device powered by AI: virtual assistants. We demonstrate the application of AIA by evaluating virtual assistants in different use contexts. First, we ask *how to capture people's AIA in order to understand their awareness of the AI-powered smart technologies in their lives*. Second, we turn our attention to the use context, asking *how people's AIA varies across different situations*. Third, we elaborate on the

implications of AIA, by asking *what the relationship is between AIA and people's reactions after an incident caused by AI-powered virtual assistant*s.

Our work will make both theoretical and practical contributions to the IS field. On the theoretical side, scholars often examine IT-related decisions and behaviors under the assumption that participants in the study are aware of the target technologies' existence, purposes, and practices. The concept of AIA suggests that not all people are equally aware of the existence of AI around them, and their awareness can vary from one context to another. We can explain when people make meaningful decisions or behave differently in different contexts by studying their AIA levels. Using virtual assistants as examples, we illustrate how AIA can be contextualized to a particular technology, and we provide the conceptual foundation for future works on this important concept.

We view AIA as a concrete, contextual, and measurable construct that can be easily adapted to other smart technologies and to other use contexts. In practice, the AIA concept can help inform us about people's decisions and behaviors regarding IT uses—for instance, the continued use of AI-powered smart technologies or the discontinued use of them. Based on previous research, the longer one has a smart speaker, the less he or she will use it (Lopatovska et al. 2019), which is due to the limited cognitive resources an individual has at his or her disposal (Chen et al. 2020; Sim et al. 2012). The limited cognitive resources result in their low awareness towards AI-powered smart technologies. When people have high levels of AIA, their awareness towards smart speakers is high. We can make people more mindful of smart speakers' uses in a given context by increasing their awareness of the devices.

This essay is organized as follows. The first section is a literature review with four parts. We first review findings on technology awareness in previous IS research. Second, we explain why

we need AI Awareness. Third, we review the concept of situation awareness (SA) and how we can use SA as the theoretical frame for building AIA. Fourth, we discuss the similarities and differences between SA and AIA. In the second section of the essay, we describe the conceptual domains and themes of AIA. We propose the conceptual definition, scopes, and dimensions of AIA. Then, we compare AIA with other similar concepts in IS. In the third section, we narrow down our focus to AI-powered virtual assistants in particular. We present the AIA model, the constructs in the model, their interrelationships, and the associated propositions. We then include the research agenda as the fourth section. Finally, the implications are discussed.

Literature Review

Awareness of technology in IS research

Awareness was studied in the IS field as early as thirty years ago (Goodhue and Straub 1991). In the Innovation Diffusion Theory, *awareness* refers to the target population's consciousness and general perceptions of innovation (Rogers 1995). Awareness is the first stage of an innovation diffusion process in the innovation model. Awareness is followed by attitude formation, decision, implementation, and conformation. After people are made aware of a new idea, they may intend to try it out as a result. Similarly, we believe that people need to have an awareness of AI-powered smart technologies before they can use them mindfully.

In the information security context, awareness has a crucial impact on one's beliefs about information security (Goodhue and Straub 1991). Through computer literacy, awareness informs people of the danger of potential abuse. The Security Awareness, Training, and Education Program (Hu and Dinev 2005) states that a specific form of awareness is important in the security setting: the awareness of the computer's operating state. People were recommended to

maintain a high degree of recognizance of the computer's operating state (Stafford and Urbaczewski 2004). The concept of awareness here refers to one's consciousness of new technology and one's general perceptions of that technology.

A similar term related to AI awareness is technology awareness, which first appeared when IS scholars studied the downsides of technologies (Dinev and Hu 2007). The authors conceptualized technology awareness as one's raised consciousness of learning about issues and strategies regarding technology, which indicates one's interest in technological matters. It focuses on the awareness of negative technology issues, such as the potential risks and outcomes of minimal security protection. The difference between AI awareness and technology awareness is that technology awareness is constructed around awareness of potential problems and their possible solutions, whereas AI awareness discusses both positive sides and negative sides of technology.

In a study by Kong et al. (Kong et al. 2021), the term *AI awareness* is used to indicate employees' perception of the implementation of AI machines in the workplace. The results show a positive relationship between AI awareness and job burnout. This version of AI awareness describes one's anxiety towards AI and the anticipation of being replaced by AI robots. The participants treat AI as a threat to their careers and feel vulnerable to this technological advancement. However, we believe that AIA should have both positive and negative effects on individuals.

Awareness is not a static variable (Sim et al., 2012), and it changes in different contexts. More recently, Correia and Compeau (2017) introduced the concept of Information Privacy Awareness (IPA) based on situation awareness. IPA refers to the knowledge of elements related to information privacy, the understanding of the elements in the environment, and the

projection of their impacts in the future. IPA discusses people's awareness of threats and how this awareness allows them to conduct privacy-related behaviors. In the study, Correia and Compeau distinguish the differences among IP literacy, IP knowledge, and IP awareness. IPA goes beyond literacy or understanding; people need to understand technology, policies, and regulations in a situation so that they are able to think abstractly about the consequences of their actions in that particular situation (Correia and Compeau 2017).

AIA: why do we need it

To understand people's dynamic relationships with AI-powered smart technologies and how they adapt themselves to an increasingly technology-mediated world, we need to recognize the roles and the influences of AIA. A massive number of automated communications between machines constitutes part of human lives (Hayles 2006). Those communications are often not in people's everyday conscious existence. Therefore, we cannot assume that everyone is aware of them. Thrift (2005) has a similar opinion and introduces a concept called the "technological unconscious." This term refers to the operation of robust and unknowable information technologies that form everyday life. The above studies are proof of people's lack of awareness of technologies' existence or functions. Therefore, it is not appropriate to assume that all people view all AI-powered technologies with the same level of awareness.

AIA constitutes one's perceptions and understandings of whether AI-powered smart technologies are present, his or her uses or applications of them, and how he or she uses them. People's AIA helps explain their decisions and behaviors associated with technology use in a particular context. For example, individuals who are not tempted to buy or are bothered by smart speakers might have little awareness of the existence of smart speakers in their

environment. Therefore, they do not feel the urge to interact with smart speakers, let alone buy one. Individuals' reactions may change as soon as their AIA towards smart speakers increases. Similarly, their usage patterns or interactions with smart speakers may change, gradually fading out as their AIA decreases. AI awareness is not a static variable, nor does it remain unchanged across different contexts.

We believe that whether and how much people perceive the existence of smart technologies influences their decisions and behaviors associated with smart technology uses. For instance, during the COVID-19 pandemic, many people do not feel safe talking to a delivery person or other person who comes to their door. Smart doorbells give them the option to give instructions to the delivery person without opening the door or having any physical contact. People with high AIA are highly aware of the existence and the functions of their smart doorbells. Since we investigate people's decisions and behaviors regarding AI-powered smart technologies, we need to realize that AI is not static either. Alexa and Siri are examples. They have evolved and become much better at listening to us and learning our patterns. Therefore, we need an updated conceptualization (Compeau, Correia, and Thatcher 2021). AIA is an updated construct to help us understand people's awareness and perceptions of AI-powered smart technologies in a changing world.

People sense or perceive AI-powered smart technologies differently when they are at different levels of AIA. Their awareness can be greatly affected by the context or environment they are in. Individuals with low levels of AIA do not recognize AI-powered smart technologies in the same way as people with high levels of AIA. Whereas people with high levels of AIA are acutely aware of the presence and the purposes of AI-powered smart technologies, people with low levels of AIA rarely recognize their existence. Therefore, their decisions and behaviors

associated with technology use reflect little thought. As AI-powered smart technologies increasingly blend in with the environment, they become less visible and less intrusive. People gradually lose their awareness of the physical presence of technologies. Thus, it becomes hard for them to tell whether or when those technologies are collecting data and how it is used. We hope that, by revealing people's AIA levels, we are able to separate those who have high AIA from those with low AIA when we investigate their decisions and behaviors.

Situation awareness

We draw on the concept of situation awareness (SA) to develop a general framework for AIA. The theory of SA has been introduced in IS research, mainly in Information Privacy (Correia and Compeau 2017; Sim et al. 2012). SA helps capture an individual's level of awareness and its effects on information privacy (Sim et al. 2012). Information privacy situation Awareness (IPSA) and information privacy awareness (IPA) are both specialized forms of SA, with a focus on privacy-related issues (Correia and Compeau 2017; Sim et al. 2012). In this study, we treat AIA as a specialization of SA, emphasizing AI-powered smart technologies. We believe that the use context is an important factor in contributing to people's different levels of awareness, leading to various decisions and behaviors. AIA captures the situational factor in the use context and the fluctuating nature of awareness traditionally neglected in the IS field.

Situation awareness (SA) refers to "the perception of the elements in the environment within a volume of time and space, the comprehension of their meaning and the projection of their status in the near future" (Endsley 2000, p3). *Projection* refers to one's ability to anticipate future events based on his or her knowledge and understanding (Endsley 1995). People can implement previous knowledge to make inferences about the future. In the study of Information

Privacy Awareness (IPA), projection indicates one's future implications or risks regarding the private information collected based on their current knowledge and understanding of this issue (Correia and Compeau 2017). In this essay, we view projections as people's evaluations and predictions regarding or concerning AI-powered smart technology in a situation. There are two components in the evaluation: cognitive evaluation and affective evaluation. Cognitive evaluations indicate that people weigh the concerns and risks of AI-powered smart technology (Dinev and Hart 2006). Affective evaluations contain one's emotions towards AI-powered smart technologies. Our reason for including affective evaluations is that people's interactions with technologies are emotionally charged, and these interactions influence their future behaviors (Clayton 2003). We believe that cognitive evaluations, affective evaluations, and predictions are important factors determining people's decisions and future uses regarding technology.

The dynamic nature of real-world situations implies that the situation is always changing, and therefore so should one's situation awareness. SA is typically defined in operational terms for people who need it for specific reasons. For example, a surgeon has a great need for SA of their coming surgeries. Although the elements of SA are different across domains and situations, the mechanism behind SA is generally applicable. When Endsley (1988) first introduced SA, she focused on building it and how awareness influences people's reading of the environmental stimuli to solve problems in a timely and efficient manner. As a specialized form of SA, we argue that AIA reflects the extent to which a person perceives the presence, purposes, and practices of AI-powered smart technologies in a given context.

SA and AIA: similarities and differences

Similarities

Both SA and AIA help explain a user's behaviors vis-à-vis a situation. SA helps guide people's behaviors in complicated situations, such as operating aircraft, controlling air traffic, or maintaining orders for large railway stations (Endsley 2000). As people face a complex system of machinery, they need SA to assist them in order to make the right decisions. People more or less recognize the existence of technologies when facing a system of smart technologies daily. Moderate to high levels of AIA could assist them in recognizing and utilizing AI-powered smart technologies effectively. People's AIA is not static, and it changes with context. Their awareness of AI-powered smart technology in one particular context and the degree of that awareness impact their decisions regarding AI-powered smart technology uses and guide their actions.

Differences in purpose

Although AIA is a form of SA, the two concepts differ in many ways (see Appendix A-Table A1). The first difference lies in the purposes of the two concepts. Before SA-related research, people could not explain how to gather accurate information to reach sound decisions in a changing environment. It was unclear how a system design could support one's ability to obtain essential information under dynamic conditions (Endsley 2000). SA reveals a way to enhance people's abilities by paying attention to the crucial information in the environment. Studies on SA have focused on system designs and typically been conducted in organizational settings (Endsley 2000). The purpose of SA is to help people make good decisions and enhance performance. Attending to critical cues in a dynamic situation proves important to organizations' ability to improve their employees' performance via SA training.

There are three purposes of AIA. The first is to reveal the changes in people's awareness of AI-powered smart technologies across contexts. We focus on how an individual's AIA varies and how it influences their technology uses in a given context. AIA shows that people make different decisions and engage in different behaviors because they are at different levels of AIA. Their awareness varies from one situation to another, which leads to inconsistencies in their behaviors. For instance, at workplaces, some people can be highly aware of the live cameras and smart speakers in the conference room during a virtual conference. However, they are less aware of the cameras or smart speakers in their own homes. They are not highly aware that cameras are watching them or that smart speakers are constantly listening to them when they are home or at a friend's house. AIA can capture such differences in awareness levels.

The second purpose of AIA is to separate meaningful decisions from unconscious ones. It is crucial for researchers and practitioners to make this distinction. It is not common for a researcher to measure people's technology awareness when investigating technology-related decisions or behaviors. However, awareness plays an important role in their decision-making. When people are highly aware of the target technology, they are mindful while around it or using it. They are very creative regarding their uses and aware of multiple perspectives of the target technology, as in IT mindfulness (Thatcher et al. 2018). AIA serves as a dividing mechanism that separates meaningful and unmeaningful mental states of AI-powered smart technology uses, as people with no or little awareness of the target technology fail to consider or use the target technology in a meaningful way.

The third purpose of AIA is to direct or even influence people's decisions due to an increased AIA under certain contexts. People with moderate to high levels of AIA have clearer perceptions of the existence of AI-powered smart technologies in a given context. Therefore,

they are more likely to notice whether such technology is in the environment or available for interactions. They know the purposes and the practices of AI-powered smart technologies. People gain more control over the decisions and actions associated with AI-powered smart technologies if they remain at a high level of AIA. They are able to use the technologies in more creative ways. Therefore, the last purpose of AIA is to direct or to influence people's decisions if we can increase their AIA.

Differences in structure

The second difference between SA and AIA is that SA consists of three hierarchical levels of knowledge, with each level built on the previous one (Endsley 2000). The three nested levels are highly inter-correlated (Endsley 1995). While SA views these dimensions as levels of knowledge that build on one another, we contend that, in AIA, these dimensions coexist. In our view, the interrelated dimensions work cooperatively (Sim et al. 2012) to establish a certain level of AIA. The three dimensions are the presence of the AI-powered smart technology, one's purposes with the AI-powered smart technology, and one's practices using it. We focus on capturing and assessing one's AIA in a given situation. Take a smart doorbell as an example. We believe the three dimensions (the presence of a smart doorbell, people's purposes for the smart doorbell, and their practices using the device) coexist. As long as they know what a smart doorbell is, they have some understanding of the device. Though lacking a full understanding, they can still use it without fully utilizing all the features. Thus, a certain level of AIA is a mix of the three components. Our focus is on the actual behaviors or decisions related to technology uses, not the accuracy of people's perceptions. We capture one's AIA through the three dimensions. Although these dimensions might not be equally weighted, each dimension is essential for AIA.

Differences in applied population

The third difference between SA and AIA is the applied population. SA focuses on people who operate a complicated machinery system and those who need SA for their work (Endsley 1988). SA helps these people to make accurate decisions and achieve high performance. On the other hand, AIA can be applied to a greater population: smart technology users at large. We investigate people who own or operate AI-powered smart technologies, regardless of their use intentions. Our target population does not need to achieve an expert-level knowledge of this technology.

Differences in outcome expectation

The fourth difference between SA and AIA lies in the outcome evaluations. In the SA theory, people need to solve problems and make the right decisions to fulfill their job requirements (Endsley 2000). Therefore, desirable behaviors, outcomes, and performance evaluations exist in SA. Organizations and companies expect their employees to perform well based on certain standards. It is easy to evaluate the decisions and behaviors that are the outcomes of SA; however, it is difficult to assess the decisions and behaviors associated with personal smart technology uses because people use such technology for various purposes. AI-powered smart technology uses covers many aspects of people's lives, from home to office, from public areas to private places. In the future, there will be regulations concerning company AI uses and data collection (Candelon et al. 2021). However, there is not currently a unified standard regarding personal AI-powered smart technology uses.

The Conceptual Domain and Theme of AIA

Conceptual definition of AIA

AIA, in this study, is tied to AI-powered smart technology uses in a given context. AIA is the extent to which a person perceives the presence, purposes, and practices of AI-powered smart technologies in a context. Awareness acts like the background radar of consciousness, continually monitoring the environment (Brown and Ryan 2003). Being aware means realizing something.

One's AIA levels do not remain the same. The changes, such as a decrease or an increase, can happen either slowly or relatively quickly. When people engage in autonomous technology uses, they form deep and non-reflective routines over time (Jasperson et al. 2005). Their awareness of AI-powered smart technology is thus relatively low due to the little cognition involved. Their AIA remains low during this process. However, their awareness of AI-powered smart technologies can increase suddenly when they experience interventions or interruptions. The interference will disrupt their routinized uses and force them to pay attention because attention is a hyped form of awareness (Westen 1999). The increased AIA breaks them away from their deep and non-reflective mental scripts. For instance, some people use smart speakers to check the weather and local traffic conditions every morning. Their smart speaker AIA decreases due to autonomous use but would increase immediately once they experience a failure to retrieve weather information one day.

We investigate what contributes to a sudden increase of AIA and what comes after it. People with moderate to high levels of AIA have heightened states of clarity and sensitivity to the three dimensions of AIA compared to those who are at a lower-level AIA. This elevated awareness

would lead to projections of AIA because awareness enables the identification of needs, conflicts, and existential concerns (Brown and Ryan 2003). Being at different levels, AIA helps us differentiate thoughtful, meaningful, and mindful decisions and behaviors from subliminal decisions and autonomous actions. To clarify the essential characteristics of AIA, we follow the recommendations of Suddaby (2006) and Mackenzie et al. (2011) and their approaches to defining characteristics.

Scope

In this section, we will examine the conditions under which AIA applies. First, we consider whether AIA is a construct for an individual or a group. Second, we address whether it can be applied to all smart technologies. Finally, we consider whether AIA is a state or a trait.

Is AIA applicable to individuals or groups?

The unit of analysis of the current study is a person. We study to what extent individuals realize the presence, purposes, and practices of AI-powered smart technology and how that realization impacts their decisions and behaviors. Therefore, AIA in this study focuses only on individuals. Organizations and companies are made up of people, so individuals in the organization can form a collective AIA at the group or organizational level. Other concepts can be interpreted at both the individual level and organizational level. For example, mindfulness can be a trait at a personal level: a state of alertness and a high level of awareness (Langer 1996). Researchers also find collective mindfulness at the team level in a study on software development teams (Vidgen and Wang 2009). We believe that a collective AIA exists, which is a group's awareness of the presence, purposes, and practices of AI-powered smart technologies.

We expect that moderate to high levels of collective AIA play a crucial role in an organization's decisions and behaviors concerning smart technology use.

Is AIA applicable to all smart technologies?

The definition of smart technologies is broad. Some refer to them as electronic devices or any systems that can be connected to the Internet or can be used interactively (Foroudi et al. 2018). Others assert that smart technologies have an artificial intelligence or machine learning component. Smartness indicates that an entity can perform and control functions that attempt to produce useful results through activities via physical, informational, technical, and intellectual resources (Alter 2020). Smart technologies can process, interpret, or even learn from the information. In this essay, we view smart technologies as entities with an AI component. Therefore, the concept of AIA may apply to a range of smart technologies with AI components, from smart speakers to wearable devices.

Is AIA a state or a trait?

We conceptualize AIA in two forms: trait and state. As a trait, AIA is relatively stable within individuals, implying that to some degree, people have more or less awareness of how AI-powered smart technology, in general, supports or changes their behaviors under any given context. As a state, AIA can change with use contexts or with specific smart technologies. We are interested in the influences of use contexts, so we focus on the state-level AIA. In practice, the state-level factors are more useful since practitioners can design environments or contexts that maximize the uses of the state predictors (Goel et al. 2011). While a trait should exert a relatively stable influence across time and space, AIA as a state predictor could exert a much more

variable influence, depending on the technology's novelty, social norms towards its use, or even a user's "trait-like" awareness of smart technologies.

Studying context-specific state variables is more accurate and more suited (Thatcher and Perrewe 2002) to the current study. Studying state variables may emit more variances because it suggests substantial within-person variability in moment-to-moment awareness of specific smart technologies. One's state-level AIA can be temporally raised or tuned down depending on use contexts. Therefore, we plan to address such changes by studying state-level AIA scenario by scenario.

Dimensionality

We have listed the dimensions of AIA in Table 2. Overall, three dimensions help us capture AIA: the presence of AI-powered smart technology, its purposes, and its practices. AIA is a second-order construct. We will use virtual assistants as examples for the demonstrations in the following section.

Table 2. Dimensions of AIA

Dimensions of AIA	Conceptual Definition	Operational Definition
The presence of AI-powered smart technology	Being aware of the existence of AI-powered smart technology (or technologies) in a situation.	To what extent one realizes that AI-powered smart technology is there.
The purposes of AI-powered smart technology	Being aware of how features of AI-powered smart technology (or technologies) could be used in a situation.	To what extent one can tell how these features can be used in a situation.
The practices of AI-powered smart technology	Being aware of how AI-powered smart technology (or technologies) are being used in a situation.	To what extent one has prior experiences using AI-powered smart technology in a situation.

The presence of AI-powered smart technology refers to one's being aware of the existence of AI-powered smart technology in a situation. The presence of AI-powered smart technology is the foundation for AIA since the definition of *awareness* indicates one's knowledge and understanding of something's existence (Merriam-Webster Dictionary 2021). The concept of presence indicates whether people note AI-powered smart technology in a situation. It also includes people's perceptions of whether such technology is available for use or interaction. We have adapted this definition of the presence of AI-powered smart technology from a study concerning one's knowledge of others' presence in a virtual world (Goel et al. 2011). In the case of the virtual assistant, *presence* here means that one knows about the existence of Siri or Alexa in a situation.

The purposes of AI-powered smart technology refer to one's awareness of how features of AI-powered smart technology may be used in a situation. Three major features of virtual assistants have been identified: the dialog function, the web search function, and the chat function (Jiang et al. 2015). Individuals use the dialog function to issue specific commands such as "call Mom" or "turn on Spotify." The web search function enables individuals to search and retrieve information, just as if they were typing keywords and searching on the Internet. The chat function allows informal communication with virtual assistants, almost like casual chatting with a friend. Some people use virtual assistants because, when doing so, there is no need to stand up or use their hands to control the appliance. Others use virtual assistants because they feel lonely and want to chat. Some people use virtual assistants because they are less tech-savvy. They feel that issuing commands with words is easier than operating the actual devices. Certain populations use virtual assistants because they have restricted mobility (Goernemann and

Spiekermann-Hoff 2020). The purposes for a virtual assistant in a given situation largely depend on people's awareness of its features.

One's actual AI-powered smart technology uses make up the practices of AI-powered smart technology. The *practices of AI-powered smart technology* refer to one's awareness of how AI-powered smart technology is being used in a situation, which comes from one's use experiences. One's actual usage of technology depends on his or her beliefs. Palak and Walls (2009) have studied teachers' technology practices related to their beliefs. They state that teachers use technology only in ways that support their beliefs about teaching, regardless of what technology could enable them to do. Another example is that many people try to avoid using voice input in public because they think it inappropriate (Easwara Moorthy and Vu 2015; Efthymiou and Halvey 2016).

In order to have high virtual assistant AIA, individuals need to perceive the presence, purposes, and practices of virtual assistants. Their perceptions of the three dimensions must be high. However, when people have low virtual assistant AIA, the causes vary. They may have little perception of the presence of a virtual assistant, or they may have little knowledge of how its features could be used. A Pew Research survey investigated smart speaker owners (Auxier 2019). The survey reveals that 58% of smart speaker owners do not want their speakers to further take their interests and preferences into account. The other 42% say that they want their speakers to do a better job by adapting to their interests and preferences in the future. Undoubtedly, the participants this Pew Research study are aware of the presence of their devices.

However, not every participant in the study is clear about the smart speaker's features. In the same survey, participants are asked the same question again, but with a description of how

smart speakers operate: "whether they would like their smart speakers to do a better job of taking their interests and preferences into account in the future, even if that meant it would need to collect more personal information about them." This time, only 33% say that they would appreciate a more customized setting. There is a clear 9% drop after some of them realize how their smart speaker's feature works. Hence, we can say that 9% of the participants have low virtual assistant AIA, especially regarding the smart speaker's features. When they realize how smart speakers work, their virtual assistant AIA rises, and they make a different decision regarding withholding further information from their smart speakers.

Similar concepts related to AIA

In this section, we compare AIA to similar concepts to improve our comprehension by highlighting essential details, making meaningful connections, and differentiating these elements. We believe that AIA always exists as a precursor to several concepts, such as IT mindfulness. For example, one needs to be aware of the existence and the features of their virtual assistant before being creative about its uses.

The four concepts listed in Table A2 in Appendix A are tech-savviness, IT mindfulness, IS habits, and cognitive absorption. We choose these four concepts because they are all popular concepts associated with technology use in the IS domain, and they all relate to AIA in some ways.

The first concept is tech-savviness, which is strong knowledge about modern technology (Cambridge Dictionary 2020). If one is tech-savvy, they can use and respond creatively to new technologies. When we describe a person as tech-savvy, we believe that they have a high awareness of modern technologies in general. As for such a person's AIA, it can range from low

to high because it is a state. It is not limited to new technology or creative uses but also pertains to existing technology and regular applications.

The second concept is IT mindfulness. IT mindfulness refers to a mindset resulting from one's awareness of the context, one's openness to, and one's value-adding applications of information technologies (Thatcher et al. 2018). IT mindfulness is a dynamic IT-specific trait, focusing on present uses. With IT mindfulness, people are alert to distinctions and open to novelty. They pay attention to the details. They are aware of multiple perspectives on how to use IT. Mindfulness can expand people's actions or adjust their actions to match the environment (Sun et al. 2016). People who have IT mindfulness express interest when they experience IT features and failures. People who have IT mindfulness are willing to engage in meaningful IT uses. Mindfulness suggests a state of alertness and a high level of awareness (Langer 1989). Hence, people who have IT mindfulness show high levels of awareness of IT and exhibit creative IT uses. IT mindfulness is consistent with high-level AIA; IT mindfulness is one of the outcomes of high-level AIA.

There are also some differences between IT mindfulness and high-level AIA. People with IT mindfulness are at high state-level AIA; however, people who have high-level AIA do not necessarily engage in meaningful or creative IT uses, even though they are fully aware of the presence, the purposes, and the practices of AI-powered smart technologies. High-level AIA leads to projections of smart technologies. People can evaluate technology uses cognitively and affectively when they have high AIA. It is up to the users' decisions and choices to emit any actions. Meaningful IT uses are one of the options that having high AIA offers to users.

The third concept is IS habit, a stable IT-specific trait. This concept is the extent to which people tend to use IT automatically. In other words, the same user responses occur when users

are given a stable supporting context as a result of past automatic behaviors (Limayem et al. 2007). Due to the lack of intention and active thinking, IS habit is a behavioral tendency (Ouellette and Wood 1998). It can be one of the outcomes of low AIA. People do not consider the presence, the purposes, or the practices of AI-powered smart technologies when they engage in automatic uses, let alone experience projections of AIA; only moderate to high AIA can lead to projections. People are likely to engage in meaningful uses or be attentive to IT uses as they reach moderate to high AIA.

The last concept is cognitive absorption, which is one's deep involvement with software (Agarwal and Karahanna 2000). This concept is a state showing the formation of user beliefs and usage intention. When people experience cognitive absorption, their focuses become narrow. Their attention is occupied with the current tasks at hand. When people engage in cognitive absorption, they ignore major stimuli in the environment (Sun et al. 2016). As related to AIA, one's awareness of AI-powered smart technology can be broad or narrow, depending on whether it is a trait or a state.

AIA can be as broad as awareness of all AI-powered smart technologies, or it can be as narrow as awareness of one feature of the target smart technology in a given context. For example, an individual can be aware of smart speakers from different brands. He can know the latest models, unit prices, and pros and cons of each brand's smart speakers. He also could have a high level of awareness of one particular model from one specific brand in one given context. This is his narrow, state-level awareness. His general awareness of smart speakers (trait-like) and heightened awareness for that specific model (state-level) coexist. We contend that one needs to be at least aware of the software before cognitive absorption takes place. Therefore, awareness of technology must take place before cognitive absorption. People persistently seek

information to understand technologies, becoming deeply involved with them, and even losing track of time (Agarwal and Karahanna 2000). Therefore, cognitive absorption can happen due to moderate to high AIA.

AIA Model and Propositions

In this section, we discuss the AIA model and the propositions around the constructs in detail. We choose one AI-powered smart technology as the representative for this study: virtual assistants, which are software agents that can complete many daily tasks for their users by engaging with them via natural language (Harish et al. 2016; Pais et al. 2015). People use alternative names for this technology, such as *smart assistant*, *virtual assistant*, *voice assistant*, *intelligent personal assistant*, *personal virtual assistant*, and *virtual assistant bot* (Burns and Igou 2019; Chung et al. 2017; Lopatovska et al. 2019). Despite the differences in name, virtual assistants are all powered by artificial intelligence and categorized into two types: built-in and stand-alone. Examples of the built-in type are Siri for Apple products and Cortana for Windows-based computers. The stand-alone type includes Alexa speakers and Google assistant devices (Chung et al. 2017).

There are several reasons that we find virtual assistants a well-suited technology for studying AIA. First, virtual assistants have been commercially available for only a few years (Yang and Lee 2019). As they are increasingly diffused among individual users, we would like to know more about how people interact with them. It is informative to investigate how different levels of AIA impact individual uses. Second, since there are many virtual assistants on the market (Siri on Apple devices, Cortana on Microsoft devices, Alexa on Amazon devices, to name a few), there are many different feature sets and user interfaces available. People who have used

virtual assistants for a length of time are likely to have quite different user experiences, which is vital to our study because we expect to see variances in the awareness of virtual assistants.

The third reason we choose virtual assistants relates to how the devices work. Virtual assistants work in a way that enables users to accomplish tasks or search for information using voice or texts (Chung et al. 2017; Hoy 2018; Moriuchi 2019). When users operate them, they do not need to have physical contact with the devices. People can forget about their devices' existence when they no longer need to touch the device to make it work. Yet even when not in use, virtual assistants still listen to the users. They collect data and store use information with or without users' knowledge (Javed et al. 2019). Therefore, not every user is aware that the devices are there or that they are being listened to all the time. We are interested to see the variations in users' awareness towards virtual assistants and how these different levels of awareness affect their interactions with virtual assistant use.

Model overview

Figure 1 presents the proposed model for AIA with propositions: the sudden increase of AI awareness and people's reactions associated with it. After receiving stimuli in the environment, people experience an increase in awareness towards AI-powered smart technologies, and they are more likely to experience projection and have some reactions afterward. As time goes by, or as people grow more familiar with AI-powered smart technologies, their AIA decreases. It is less likely that they will engage in projections of AI. People engage with both cognitive and affective evaluations of AI-powered smart technologies during the projection phase.

The evaluations lead to three types of reactions: cognitive, affective, and behavioral. Not everyone experiences the three types of reactions at the same time. People likely experience at

least one of them as the result of heightened AIA and projections. A feedback loop exists in the model, from the evaluations back to the stimuli. We believe that after people experience cognitive, affective, or behavioral reactions, these reactions all become part of their experiences with AI-powered smart technology. Since specific moments of interactions with technologies shape their future interactions (Goernemann and Spiekermann-Hoff 2020), users become more sensitive to similar stimuli based on their prior experiences.

Figure 1. AIA Model with Propositions

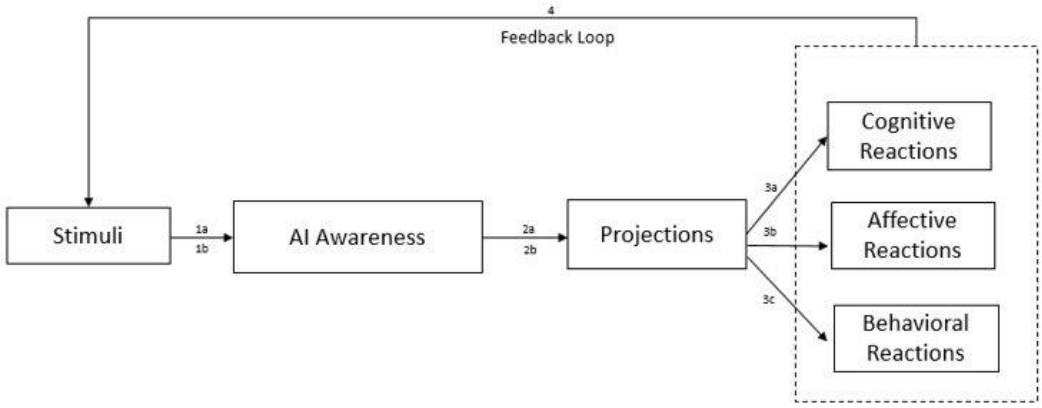

In this model, we take the positive perspective to study the increase of AIA by stimuli, the ways that people engage in projections of AI-powered smart technology under its influence, and their reactions after the incident. The decrease of AIA over time and how that affects people's decisions and behaviors will be explored in future work.

The relationship between stimuli and AIA

When people have low levels of AIA, they hardly notice the presence of their smart technologies, let alone experience any projections or evaluations. However, their state-level awareness is not static. It may increase abruptly when they experience stimuli from the

environment, such as news reports stating that smart speakers record private conversations or that Alexa is activated unsolicited. After reading these reports, people with low virtual assistant AIA will become immediately aware of their virtual assistants. They will engage in projections of the virtual assistant as they read the news and may choose to unplug their smart speakers immediately.

There are different types of stimuli. One example is technology-related incidents, such as failures, successes, or technology interruptions. As people interact with virtual assistants, they may not pay close attention to them. However, once people experience technological failure or make a serious mistake, they will turn their attention to the technology (de Guinea and Markus 2009). For instance, when users do not activate Alexa, it sometimes utters unnecessary and lengthy monologues or beeps unexpectedly. Or it plays an advertisement for "Music Unlimited" if users request a song that is not in the library. When people experience interruptions or failures, their AIA increases compared to their AIA during routine uses.

Some stimuli are people-triggered incidents, such as when everyone around a person uses a smartphone or owns a piece of wearable technology. That person would likely have heightened AIA towards smartphones or smartwatches compared to those who have no such stimuli in the environment.

Finally, the stimuli can also be event-related incidents. People's AIA can increase as a special event occurs. During the COVID-19 pandemic, people are turning to the help of smart technologies to fulfill their job requirements, such as video conferencing, or to satisfy their everyday needs, such as entertainment and social interaction. Under this circumstance, many people are highly aware of the existence of AI-powered smart technologies and how to use them. Hence, event-related incidents can trigger an increase in AIA.

We are interested in studying the types of stimuli that attract people's attention and trigger their AIA to increase. One study by Louis and Sutton (1991) states that people engage with conscious processing as a result of three types of stimuli: when a given context is novel (i.e., one's first uses of IT), when an individual notes a discrepancy between reality and expectation (i.e., IT interruptions or failures), and when an individual deliberately focuses on his or her behaviors (i.e., pressing the "no" button when asked to share location information). Sun (2012) also identified three motivating triggers: novel situations, discrepancies, and deliberate initiatives. The first type of stimuli does not apply in the current study, since we set the study in a familiar technology use setting. Therefore, we believe that:

Proposition 1a: People are more likely to experience an increase in AIA when a discrepancy between reality and expectation of smart technology uses occurs.

Proposition 1b: People are more likely to experience an increase in AIA when they deliberately focus on smart technology uses.

The relationship between AIA and projection

AIA either increases with a stimulus or decreases as time passes. As people become more familiar with smart technologies, their AIA decreases, and they develop habits of use, leading to more autonomous uses instead of exploratory uses (Jasperson et al. 2005). In the AIA model, we study a sudden increase of AIA by stimuli, how people engage in projections, and their reactions to the incident.

Projection means one's evaluations of AI-powered smart technology uses in a situation. There are two components in the projection: cognitive evaluation and affective evaluation. Prior studies have investigated cognitive and affective evaluations from the perspective of motivators.

Cognitive evaluations result in extrinsic rewards, whereas affective evaluations lead to intrinsic rewards. Motivation Theory states that both extrinsic rewards and intrinsic rewards can motivate individuals to use new technologies (Davis et al. 1992; Venkatesh et al. 2003). *Cognitive evaluations* refer to people's concerns or consideration of risks associated with AI-powered smart technology uses (Dinev and Hart 2006). *Affective evaluations* refer to one's emotional responses (relatedness, emotional energy, and dependence) when thinking of themselves concerning the AI-powered smart technologies with which they interact (Carter et al. 2020). Affective evaluation is adapted from IT Identity Theory (Carter et al. 2020; Carter and Grover 2015). As reflections of IT identity, those emotional responses help to differentiate one's reactions to different technologies (Carter et al. 2020). We believe that affective evaluation impacts people's preferences towards technologies. If they identify themselves with certain technology, they find opportunities to engage with it.

Not everyone experiences cognitive and affective evaluations at the same time. An individual might only experience one as the result of heightened AIA. As a virtual assistant recommends music or products to users, some people may feel enthusiastic or connected with it but not engage in cognitive evaluations. Some might consider the pros and cons of the recommendations but not engage much in affective evaluations. They may question why virtual assistants know their preferred music genres or know their favorite shops (Goernemann and Spiekermann-Hoff 2020). Those are the results of the projections that follow an increase in AIA. Therefore:

Proposition 2a: People are more likely to experience cognitive evaluations as their AIA increases.

Proposition 2b: People are more likely to experience affective evaluations as their AIA increases.

The relationship between projection and reactions

In the AIA model, cognitive reactions, affective reactions, and/or behavioral reactions occur at the end of projection following heightened AIA. After people experience failures or interruptions during their uses of technology, they react to the situations. Cognitive reactions refer to people's thoughts on AI-powered smart technology uses in response to the incident, ranging from positive feedback to criticism. On the other hand, affective reactions are their emotions relating to technology uses in response to the incident. For example, people might feel insecure, confused, or angry after realizing that their virtual assistants consistently listen to them. Behavioral reactions are people's actions towards AI-powered smart technology after the incident, from discontinuing use to exploring new uses. As in the previous example of virtual assistants listening to them, some people might unplug their smart speakers immediately as a behavioral reaction. All three reactions may or may not happen at the same time. Therefore,

Proposition 3a: People are more likely to experience cognitive reactions at the end of projection.

Proposition 3b: People are more likely to have affective reactions at the end of projection.

Proposition 3c: People are more likely to emit behavioral reactions at the end of projection.

The relationship between reactions and stimulus

The reactions later become part of people's experiences with AI-powered smart technologies and make them more sensitive to similar stimuli in the environment. They notice

whether AI-powered smart technologies exist, observe how other people use them, and learn about their features. The specific moments of users' interactions, both positive and negative, play an impactful role in users' impressions and shape their future interactions with technologies (Goernemann and Spiekermann-Hoff 2020). In this way, people's recollections of reactions and responses help them become more aware of similar stimuli. Therefore, we propose that:

Proposition 4: Reactions make people alert to the stimuli associated with AI-powered smart technology in the environment.

Research Agenda for AIA

Future directions

Much prior literature has investigated the relationship between humans and technologies. These studies either focus on the bright side of IT uses, such as mindful uses, or they study the dark side of technology, such as unhealthy IT uses. The purpose of the current study is to emphasize the existence and the role of smart technology in people's lives. AI-powered smart technology coexists with people. Smart technology co-constructs the environment with people as it assists them, monitors them, listens to them, interacts with them, and even manipulates them. The consideration of AI awareness is important when we examine people's relationships with smart technology. A wide range of IS topics relating to the adoption, continuation, and discontinuation of IT use can benefit from including the concept of AIA or a larger concept such as people's general awareness towards IT. This section outlines potential directions and opportunities for examining AIA and its impacts in IS research.

Potential opportunities for incorporating AIA into IS research

We address the sustained awareness in the use contexts in the realm of the study. We do not discuss the formation of AIA. It will be interesting to examine the construction of AIA at the smart technology adoption phase. There may be different factors contributing to one's formation of AIA as they face a new smart technology, or when he or she adopts a mainstream technology versus a less popular technology.

Another potential topic for future exploration is Information Technology Awareness (ITA). As the name suggests, ITA focuses on information technologies in general. It is not limited to one particular type of information technology or smart technologies. We view it as a bigger concept and a more sophisticated perception than AIA. Some medical and physical research (Brown and Ryan 2003; Dane 2011) suggests that some people are more predisposed to be mindful. If we view ITA as a trait, we will be able to explore individual differences and what might contribute to those differences. It is also possible that a group of people could form an ITA as a collective trait. A collective ITA can be the extent to which an organization perceives the presence, purposes, or practices of information technologies. We can study how ITA, as a collective trait, influences organizational decisions or behaviors regarding IT uses. We can also probe what might contribute to the formation of a collective ITA.

It is promising to record and examine AIA and its gradual changes over a duration of time. As AI-powered smart technology is designed, constructed, and used by people, it interacts with and co-constructs the world with people. We can trace not only people's AIA over time but also how their evolving awareness changes the design, use, or practices of smart technologies. Evidence suggests that the longer people own smart speakers, the less often they use them (Lopatovska et al. 2019). Although the mechanism of this phenomenon is still unclear,

researchers propose some possible explanations: some users might question whether this technology is vital enough to merit long-term adoption; some choose to use a virtual assistant for its novelty; some doubt that it bridges existing gaps in users' information, entertainment, educational, social, or other needs (Lopatovska et al. 2019). For various reasons, people's use of virtual assistants diminishes over time.

We believe that the long-term decreasing smart technology usage pattern is consistent with the awareness pattern. In general, people are highly aware of smart technology at the beginning usage phase, and then their awareness decreases as time goes by. People likely stop using the smart technology when their awareness wanes down to a certain level, or they only engage in minimum automatic uses, such as using an Apple watch to check the time. However, if one can maintain moderate to high AIA for a long time, one should be able to use smart technologies in a meaningful way or mindful way for a long time. We believe that a longitudinal study concerning AIA and smart technology uses would provide us with a more explicit picture of the awareness patterns, as well as the usage patterns.

We have narrowed our research to only one type of smart technology—virtual assistants. It would be interesting to see what AIA means and what it suggests in the context of other AI-powered smart technologies. For example, smart cars or auto-pilot cars, as an emerging smart technology, have gained much attention and recognition (Wu 2019). With different smart technologies, we can generate different sets of research questions. How would people's AIA on smart cars impact their behaviors regarding driving? How does their AIA on smart cars affect their decisions around purchasing a smart vehicle? We can even examine previous research questions with the new angle that smart technology awareness offers us.

The last topic for future directions concerns what AIA means to policymakers. What we have investigated in this essay is limited to the perspective of a user. However, we are not clear on what AIA brings to the table for policymakers. Since AIA has never been used in this area, it is worth exploring policymakers' approaches to regulating technology and thinking about future laws' structures after they take into account people's awareness towards AI-powered smart technologies.

Implications

We have defined and advanced the understanding of AIA and how the concept of AIA facilitates IS research in the following ways. First, AIA informs us that people have different levels of awareness regarding AI-powered smart technology in different contexts. Such varied AIA levels explain why the same person engages with the same smart technologies differently at different times or situations. Second, we contend that AIA can be used to separate meaningful decisions from unconscious ones. When people have little AIA, their decisions regarding AI-powered smart technology use can be less apparent or meaningful to them than those who have moderate to high levels of AIA. Therefore, people's awareness levels can help us distinguish meaningful decisions and behaviors from automatic uses.

Third, we would like to foster AIA among people in order to maximize the benefits of AI-powered smart technologies. We can find ways to increase awareness of certain AI-powered smart technologies and make people more mindful when using these technologies in specific contexts. While we cannot force everyone to use AI-powered smart technology in the same way, we can help them be aware of their choices and options so that they can grasp opportunities to use AI-powered smart technology mindfully.

Our study has several theoretical and practical insights. First, it is the first study to propose the concept of AI awareness (AIA). By adapting SA and its theory, we can present a comprehensive view regarding people's awareness at different levels, both for virtual assistants and AI-powered smart technology in general. Second, we believe that studying AIA is more significant than a concept development. It provides an alternative approach for addressing human-technology interactions; however, some interactions are meaningful, some are not. Hence, we strongly suggest that researchers take people's awareness of smart technology into account when investigating people's decisions and behaviors associated with smart technology uses. Third, this study investigates the proposed research model on awareness of virtual assistants and identifies the outcomes of virtual assistant AIA.

Focusing on virtual assistants does not limit the scope in which AIA's concept can be applied. We believe that a wide range of IS topics relating to smart technologies will benefit from including the concept of AIA. This study sets a foundation for future researchers to incorporate AIA in their studies by adopting the measurements developed from this line of studies. Finally, AIA can assist practitioners and policymakers in practice when policymakers design policies and smart technology usage guidelines. We believe our AIA framework can be an influencing factor to be weighed in when making cybersecurity policy or regulation. Our AIA model can provide a useful tool to create feasible procedures for implementing cybersecurity policy effectively.

References

Accenture. 2022. "Artificial Intelligence Services." (https://www.accenture.com/us-en/services/ai-artificial-intelligence-index?c=acn_glb_brandexpressiongoogle_12619230&n=psgs_1221&gclid=EAIaIQobChMI_Z_PoYuH9gIVeB-tBh3R5wtmEAAYAyAAEgLSe_D_BwE&gclsrc=aw.ds)

Agarwal, R., and Karahanna, E. 2000. "Time Flies When You're Having Fun: Cognitive Absorption and Beliefs about Information Technology Usage," *MIS Quarterly* (24:4), pp. 665–694. (https://doi.org/10.2307/3250951).

Alter, S. 2020. "Making Sense of Smartness in the Context of Smart Devices and Smart Systems," *Information Systems Frontiers* (22:2), Springer, pp. 381–393. (https://doi.org/10.1007/s10796-019-09919-9).

Andrejevic, M. 2002. "The Work of Being Watched: Interactive Media and the Exploitation of Self-Disclosure," *Critical Studies in Media Communication* (19:2), pp. 230–248. (https://doi.org/10.1080/07393180216561).

"Artificial Intelligence." 2022. *Wikipedia*. (https://en.wikipedia.org/wiki/Artificial_intelligence, accessed January 1, 2022).

Auxier, B. 2019. "5 Things to Know about Americans and Their Smart Speakers," *Fact Tank,* Pew Research, November 21. (https://www.pewresearch.org/fact-tank/2019/11/21/5-things-to-know-about-americans-and-their-smart-speakers/, accessed December 12, 2021).

Beer, D. 2009. "Power through the Algorithm? Participatory Web Cultures and the Technological Unconscious," *New Media and Society* (11:6), pp. 985–1002. (https://doi.org/10.1177/1461444809336551).

Bharadwaj, A., El Sawy, O. A., Pavlou, P. A., and Venkatraman, N. 2013. "Digital Business Strategy: Toward a Next Generation of Insights," *MIS Quarterly* (37:2), pp. 471–482.

Blanchard, A. L., and Henle, C. A. 2008. "Correlates of Different Forms of Cyberloafing: The Role of Norms and External Locus of Control," *Computers in Human Behavior* (24:3), pp. 1067–1084. (https://doi.org/10.1016/j.chb.2007.03.008).

Brown, K. W., and Ryan, R. M. 2003. "The Benefits of Being Present: Mindfulness and Its Role in Psychological Well-Being," *Journal of Personality and Social Psychology* (84:4), pp. 822–848. (https://doi.org/10.1037/0022-3514.84.4.822).

Burns, M. B., and Igou, A. 2019. "'Alexa, Write an Audit Opinion'": Adopting Intelligent Virtual Assistants in Accounting Workplaces," *Journal of Emerging Technologies in Accounting*

(16:1), pp. 81–92. (https://doi.org/10.2308/jeta-52424).

Burrows, R. 2009. "Afterword: Urban Informatics and Social Ontology," in *Handbook of Research on Urban Informatics*, M. Foth (ed.), PA: Information Science Reference, pp. 450–454.

Candelon, F., Charme di Carlo, R., De Bondt, M., and Evgeniou, T. 2021. "AI Regulation Is Coming," *Harvard Business Review*. (https://hbr.org/2021/09/ai-regulation-is-coming).

Carter, M., and Grover, V. 2015. "Me, My Self, and I(T): Conceptualizing Information Technology Identity and Its Implications," *MIS Quarterly* (39:4), pp. 931–957.

Carter, M., Petter, S., Grover, V., and Bennett Thatcher, J. 2020. "IT Identity: A Measure and Empirical Investigation of Its Utility to IS Research IT Identity: A Measure and Empirical Investigation of Its Utility to IS Research."

Chen, L., Nath, R., and Tang, Z. 2020. "Understanding the Determinants of Digital Distraction: An Automatic Thinking Behavior Perspective," *Computers in Human Behavior* (104). (https://doi.org/10.1016/j.chb.2019.106195).

Chung, H., Iorga, M., Voas, J., and Lee, S. 2017. "Alexa, Can I Trust You?," *Computer* (50:9), pp. 100–104. (https://doi.org/10.1109/MC.2017.3571053.Alexa).

Clayton, S. 2003. "Environmental Identity: A Conceptual and an Operational Definition," *Identity and the Natural Environment: The Psychological Significance of Nature*, pp. 45–65.

Correia, J., and Compeau, D. 2017. "Information Privacy Awareness (IPA): A Review of the Use, Definition and Measurement of IPA," in *Proceedings of the 50th Hawaii International Conference on System Sciences*, pp. 4021–4030. (http://hdl.handle.net/10125/41646).

Dane, E. 2011. "Paying Attention to Mindfulness and Its Effects on Task Performance in the Workplace," *Journal of Management* (37:4), pp. 997–1018. (https://doi.org/10.1177/0149206310367948).

Davis, F. D., Bagozzi, R. P., and Warshaw, P. R. 1992. "Extrinsic and Intrinsic Motivation to Use Computers in the Workplace," *Journal of Applied Social Psychology* (22:14), pp. 1111–1132.

Digital footprint. In *Wikipedia*. (https://en.wikipedia.org/wiki/Digital_footprint, accessed January 2020).

Dinev, T., and Hart, P. 2006. "An Extended Privacy Calculus Model for E-Commerce Transactions," *Information Systems Research* (17:1), pp. 61–80. (https://doi.org/10.1287/isre.1060.0080).

Dinev, T., and Hu, Q. 2007. "The Centrality of Awareness in the Formation of User Behavioral Intention toward Protective Information Technologies," *Journal of the Association for Information Systems* (8:7), pp. 386–408. (https://doi.org/10.17705/1jais.00133).

Easwara Moorthy, A., and Vu, K. P. L. 2015. "Privacy Concerns for Use of Voice Activated Personal Assistant in the Public Space," *International Journal of Human-Computer Interaction* (31:4), pp. 307–335. (https://doi.org/10.1080/10447318.2014.986642).

Efthymiou, C., and Halvey, M. 2016. "Evaluating the Social Acceptability of Voice Based Smartwatch Search," in *Asia Information Retrieval Symposium*, Cham: Springer, pp. 267–278.

Endsley, M. R. 1988. "An Evaluation for Situation Awareness Enhancement," in *Proceedings of the Human Factors Society*.

Endsley, M. R. 1995. "Measurement of Situation Awareness in Dynamic Systems," *HUMAN FACTORS* (Vol. 37).

Endsley, M. R. 2000. "Situation Awareness Analysis and Measurement," in *Situation Awareness Analysis and Measurement*, Mahwah, NJ: Lawrence Erlbaum Associates, pp. 1–23.

Foroudi, P., Gupta, S., Sivarajah, U., and Broderick, A. 2018. "Investigating the Effects of Smart Technology on Customer Dynamics and Customer Experience," *Computers in Human Behavior* (80), pp. 271–282. (https://doi.org/10.1016/j.chb.2017.11.014).

Goel, L., Johnson, N. A., Junglas, I., and Ives, B. 2011. "Special Issue from Space To Place: Predicting Users' Intentions to Return to Virtual Worlds 1," *MIS Quarterly* (35:3), pp. 749–771.

Goernemann, E. M., and Spiekermann-Hoff, S. 2020. "Moments of Truth with Conversational Agents: An Exploratory Quest for the Relevant Experiences of Alexa Users," in *Twenty-Eighth European Conference on Information Systems*, pp. 1–17.

Goodhue, D. L., and Straub, D. W. 1991. "Security Concerns of System Users A Study of Perceptions of the Adequacy of Security," *Information and Management* (20), pp. 13–27.

de Guinea, and Markus. 2009. "Why Break the Habit of a Lifetime? Rethinking the Roles of Intention, Habit, and Emotion in Continuing Information Technology Use," *MIS Quarterly* (33:3), pp. 433–444. (https://doi.org/10.2307/20650303).

Harish, A., Naveensankar, K. S., Abdullah, M., and Devi, K. K. 2016. "VFF-A Framework for Linking Virtual Assistants with IoT," *An International Journal of Advanced Computer Technology* (1), pp. 58–61.

Hayles, N. K. 2006. "Unfinished Work: From Cyborg to Cognisphere," *Theory, Culture &*

Society (23:8), pp. 159–166. (https://doi.org/10.1177/0263276406069229).

Hoy, M. B. 2018. "Alexa, Siri, Cortana, and More: An Introduction to Voice Assistants," *Medical Reference Services Quarterly* (37:1), pp. 81–88. (https://doi.org/10.1080/02763869.2018.1404391).

Hu, Q., and Dinev, T. 2005. "Is spyware an internet nuisance or public menace?," *Communications of the ACM*, (48:8), pp. 61–66.

Jasperson, J. S., Carter, P. E., and Zmud, R. W. 2005. "A Comprehensive Conceptualization of Post-Adoptive Behaviors Associated with Information Technology Enabled Work Systems," *MIS Quarter* (29:3), pp. 525–557.

Javed, M. A., Zeadally, S., and Hamida, E. Ben. 2019. "Data Analytics for Cooperative Intelligent Transport Systems," *Vehicular Communications* (15), pp. 63–72. (https://doi.org/10.1016/j.vehcom.2018.10.004).

Jiang, J., Awadallah, A. H., Jones, R., Ozertem, U., Zitouni, I., Kulkarni, R. G., and Khan, O. Z. 2015. "Automatic Online Evaluation of Intelligent Assistants," in *Proceedings of the 24th International Conference on World Wide Web*, Association for Computing Machinery, Inc, May 18, pp. 506–516. (https://doi.org/10.1145/2736277.2741669).

Kong, H., Yuan, Y., Baruch, Y., Bu, N., Jiang, X., and Wang, K. 2021. "Influences of Artificial Intelligence (AI) Awareness on Career Competency and Job Burnout," *International Journal of Contemporary Hospitality Management* (33:2), pp. 717–734. (https://doi.org/10.1108/IJCHM-07-2020-0789).

Langer, E. J. 1989. "Minding Matters: The Consequences of Mindlessness-Mindfulness," in *Advances in Experimental Social Psychology* (Vol. 22), Academic Press, pp. 137–173.

Langer, E. J. 1996. "In Control," in *Introducing Psychological Research*, pp. 381–386.

Limayem, M., Hirt, S. G., and Cheung, C. M. K. 2007. "How Habit Limits the Predictive Power of Intention: The Case of Information Systems," *Source: MIS Quarterly* (31:4), pp. 705–737.

Lopatovska, I., Rink, K., Knight, I., Raines, K., Cosenza, K., Williams, H., Sorsche, P., Hirsch, D., Li, Q., and Martinez, A. 2019. "Talk to Me: Exploring User Interactions with the Amazon Alexa," *Journal of Librarianship and Information Science* (51:4), pp. 984–997. (https://doi.org/10.1177/0961000618759414).

Louis, M. R., and Sutton, R. I. 1991. "Switching Cognitive Gears: From Habits of Mind to Active Thinking," *Human Relations* (44:1), pp. 55–76.

McCarney, R., Warner, J., Iliffe, S., Van Haselen, R., Griffin, M., and Fisher, P. 2007. "The Hawthorne Effect: A Randomised, Controlled Trial," *BMC Medical Research Methodology* (7), pp. 1–8. (https://doi.org/10.1186/1471-2288-7-30).

Moriuchi, E. 2019. "Okay, Google!: An Empirical Study on Voice Assistants on Consumer Engagement and Loyalty," *Psychology and Marketing* (36:5), pp. 489–501. (https://doi.org/10.1002/mar.21192).

Nettle, D., Harper, Z., Kidson, A., Stone, R., Penton-Voak, I. S., and Bateson, M. 2013. "The Watching Eyes Effect in the Dictator Game: It's Not How Much You Give, It's Being Seen to Give Something," *Evolution and Human Behavior* (34:1), pp. 35–40. (https://doi.org/10.1016/j.evolhumbehav.2012.08.004).

Ouellette, J. A., and Wood, W. 1998. "Psychological Bulletin Habit and Intention in Everyday Life: The Multiple Processes by Which Past Behavior Predicts Future Behavior," *Psychological Bulletin* (124:1), pp. 54–74.

Pais, S., Casal, J., Ponciano, R., and Lourenco, S. 2015. "Unsupervised Assistive and Adaptive Intelligent Agent in Smart Environment," in *Intelligent Environments and System Conferences ICIES*, Paris.

Palak, D., and Walls, R. T. 2009. "Teachers' Beliefs and Technology Practices," *Journal of Research on Technology in Education* (41:4), pp. 417–441. (https://doi.org/10.1080/15391523.2009.10782537).

Püschel, L., Röglinger, M., and Schlott, H. 2016. "What's in a Smart Thing? Development of a Multi-Layer Taxonomy," in *Thirty Seventh International Conference on Information Systems, ICIS 2016*, pp. 1–19.

Reigeluth, T. 2014. "Why Data Is Not Enough: Digital Traces as Control of Self and Self-Control," *Surveillance and Society* (12:2), pp. 243–254. (https://doi.org/10.24908/ss.v12i2.4741).

Rogers, E. M. 1995. "Diffusion of Innovations: Modifications of a Model for Telecommunications.," in *Die Diffusion von Innovationen in Der Telekommunikation*, Berlin, Geidelberg: Springer, pp. 25–38.

Sim, I., Liginlal, D., and Khansa, L. 2012. "Information Privacy Situation Awareness: Construct and Validation," *Journal of Computer Information Systems* (53:1), pp. 57–64. (https://doi.org/10.1080/08874417.2012.11645597).

Stafford, T. F., and Urbaczewski, A. 2004. "Spyware: The Ghost in The Machine," *Communications of the Association for Information Systems*.

Suddaby, R. 2006. "From the Editors: What Grounded Theory Is Not," *Academy of Management Journal* (49:4), pp. 633–642. (https://doi.org/10.5465/AMJ.2006.22083020).

Sun, H. 2012. "Understanding User Revisions When Using Information System Features:

Adaptive System Use and Triggers," *MIS Quarterly* (Vol. 36).

Sun, H., Fang, Y., and Zou, H. M. 2016. "Choosing a Fit Technology: Understanding Mindfulness in Technology Adoption and Continuance," *Journal of the Association for Information Systems* (17:6), pp. 377–412. (https://doi.org/10.17705/1jais.00431).

Sun, Z. 2019. *Managerial Perspectives on Intelligent Big Data Analytics*, Papua New Guinea: IGI Global.

Thatcher, J. B., and Perrewe, P. L. 2002. "An Empirical Examination of Individual Traits as Antecedents to Computer Anxiety and Computer Self-Efficacy," *MIS Quarterly* (26:4), pp. 381–396.

Thatcher, J. B., Wright, R. T., Sun, H., Zagenczyk, T. J., and Klein, R. 2018. "Mindfulness in Information Technology Use: Definitions, Distinctions, and a New Measure," *MIS Quarterly* (42:3), pp. 831–847. (https://doi.org/10.25300/MISQ/2018/11881).

Venkatesh, V., Morris, M., Davis, G., and Davis, F. 2003. "User Acceptance of Information Technology: Toward a Unified View," *MIS Quarterly* (27:3), pp. 425–478.

Vidgen, R., and Wang, X. 2009. "Coevolving Systems and the Organization of Agile Software Development," *Information Systems Research* (20:3), pp. 355–376. (https://doi.org/10.1287/isre.l090.0237).

Weiser, M. 1993. "Ubiquitous Computing," *Computer* (26:10), pp. 71–72. (https://doi.org/10.1109/2.237456).

Westen, D. 1999. *Psychology: Mind, Brain, and Culture* (2nd ed.), New York: Wiley.

Wu, S. 2019. "Automatic Electric Delivery Smart Car Based on SLAM," in *AIP Conference Proceedings* (Vol. 2185), American Institute of Physics Inc., December 9. (https://doi.org/10.1063/1.5137893).

Yang, H., and Lee, H. 2019. "Understanding User Behavior of Virtual Personal Assistant Devices," *Information Systems and E-Business Management* (17:1), pp. 65–87. (https://doi.org/10.1007/s10257-018-0375-1).

Zickuhr, K. 2013. *Tablet Ownership*, Pew Research Center.

AIA: A MEASURE AND EMPIRICAL INVESTIGATION OF ITS MODEL AND RELATED CONSTRUCTS

Introduction

There is no doubt that artificial intelligence is one of the most popular technologies today. More than half of U.S. households own a smart speaker. One hundred twenty-eight million people in the U.S. use voice assistants (Dickson 2022). According to a recent report by Statista, the global AI software market will grow 54% yearly and is expected to approach $22.6 billion in coming years (Statista Research Department 2020). The revenue from the AI software market is expected to approach 126 billion dollars by the year 2025 (Statista Research Department 2022).

Many organizations see the benefits of embedding AI-powered smart technologies in their businesses. According to Gartner, 37% of organizations have already implemented AI in their businesses. The number of organizations employing AI over the past four years has increased by 270% (Stamford 2019), and ninety-five percent of customer interactions are predicted to be handled by AI-powered chatbots by the year 2025 (Nirale 2018).

As AI-powered hardware and software become cheaper and more available, we are beginning to see AI used in many tools and devices. We have AI-powered applications and predictions running on our computers, phones, and wearable technologies. We see AI-powered smart technologies embedded in our vehicles, household items, and workplace gadgets (Marr 2020). The voice assistant, an AI-powered smart technology, is growing increasingly popular in cars and other settings where users prefer not to look at or interact with a screen (Dickson 2022).

While we are growing accustomed to the idea of AI-powered smart technologies and tools, it is becoming increasingly difficult for us to tell which technologies are powered by AI and which

are not. For example, organizations use chatbots to deal with customers. As the datasets used to train natural language processing algorithms continue to grow, we cannot distinguish whether we are dealing with a human or a robot during customer interactions (Marr 2020).

There are increasing concerns regarding the working of AIA and AI-powered surveillance. AI applications depend on existing data to train algorithms to learn patterns and make predictions. In order to make more accurate predictions, companies use massive amounts of data from real customers without those customers realizing it. For example, Internet companies use our clicks to learn our preferences for news, websites, and products (Heikkila 2021). Companies and organizations purchase AI-powered workplace tools to monitor and analyze their employees in order to boost their performances (Cater and Heikkila 2021) and can monitor employees' behaviors online or offline, from the number of emails sent, to the number of bathroom breaks, to even the length of those breaks. In February 2021, Amazon started tracking their delivery drivers with AI-powered smart cameras when they look away from the road or exceed the speed limit (Cater and Heikkila 2021; Palmer 2021). Not everyone is AI-savvy or understands how AI works. Therefore, Ponce Del Castillo, a senior researcher at the European Trade Union Institute, has said that employees need to understand the impacts and the risks of AI because they cannot see the automation processes produced by it (Heikkila 2021).

We believe that awareness is not static. People are at different levels of awareness when situations change. Therefore, the purpose of this essay is to confirm a new construct that describes people's awareness towards AI-powered smart technologies while taking situations into consideration. This new construct is called AI awareness (AIA). AIA demonstrates that people engage in different behaviors or make different decisions regarding AI-powered smart technologies because their awareness of AI-powered smart technologies changes. Even when

facing the same AI-powered smart technologies, people can make different usage-related decisions due to changes in their awareness. We have introduced AIA and its model in the first essay. For this essay, we have conducted one pilot study and two studies to present the evidence and the measures for AIA and to test its model. We plan to answer the following research questions:

1. How can we capture people's AIA?
2. Does people's AIA vary across different situations?
3. What is the relationship between AIA and people's reactions after an incident caused by AI-powered virtual assistants?

The rest of the essay unfolds as follows. The second section offers a conceptual overview of AIA and its model. The third section introduces the development of the scale and presents the results from the Pilot Study. The fourth section uses Study 1 to further confirm the validity and reliability of the scale. The fifth section contains Study 2 and evaluates how people's awareness changes across different situations. The sixth section discusses the implications and the limitations of the studies. Finally, the last section contains the conclusion of the essay.

The Concept of AIA

What is AIA?

Before we discuss AIA and its model, we will first look at the definitions of AI and awareness. Merriam Webster.com (2021) defines *artificial intelligence* as "a branch of computer science dealing with the simulation of intelligent behavior in computers." AI refers to the ability of machines to mimic human behaviors that require some cognitive components. AI falls under the umbrella term machine learning, and it requires substantial amounts of data and high

processing power (Syam and Sharma 2018). In the realm of this essay, we view AI-powered smart technologies as devices or systems that have an AI component and can be connected to the Internet or be used interactively (Foroudi et al. 2018).

Awareness is one's knowledge and understanding that something is happening or exists (Merriam Webster Dictionary 2021). Hence, the concept of AIA informs us about one's knowledge and understanding of the existence of AI-powered smart technologies in the environment. The theory of awareness we have chosen is the situation awareness (SA) theory, which has been applied in many domains, such as aviation, emergency response, and traffic control (Endsley 1995). It has been used in the IS privacy domain before (Correia and Compeau 2016; Sim et al. 2012). Based on the findings of SA in privacy research, awareness is not static, and it changes based on the situation (Sim et al. 2012). Therefore, we need to investigate the role of situations when we study AIA and its related constructs. We expect that one's AIA, a specific type of awareness, changes according to the situations

In this essay, we view AIA as a specialized form of SA. Specifically, it is SA in the context of artificial intelligence. There are three parts to SA: perception, understanding, and projection. Therefore, in our definition of AIA, we have captured *perception* as the presence of AI-powered smart technologies in a situation. We have viewed the *understanding* of AI-powered smart technologies as people's knowledge on the purposes of the AI-powered smart technologies and their practices of them in a situation. As for the *projection* found in SA, we view it as a separate part of AIA. We believe that only when people achieve higher levels of AIA can they then move on to the projection phase of AIA. We view projection as people's evaluations and their predictions of AI-powered smart technologies in a situation. The more they perceive and

understand AI-powered smart technologies, the more accurately they will be able to evaluate the technologies and predict possible future outcomes with them.

AIA is similar to SA in that the more that people perceive and understand, the more likely they are to make good projections. Those projections will result in one's making good and accurate decisions. We believe that this holds true for AIA as well. The more people perceive and understand AI-powered smart technologies, the more they will make good projections regarding the uses and the futures of those technologies. However, since we focus on personal uses of AI-powered smart technologies, we are not evaluating one's decisions or behaviors regarding them. In AIA, there is no right or wrong. This is in contrast to SA given that, in SA, many organizations try to train their employees to make good decisions. Hence, there are many possibilities involving personal uses of AI-powered smart technologies. What is more, people do not need to be AI experts to use AI-powered smart technologies. That fact brings another layer of uncertainty.

AIA is one's perceptions of the presence, purpose, the practice of AI powered smart technology in a situation. We have developed the concept of AIA based on SA (Endsley 1995). In SA theory, people can make decisions based on their knowledge, understanding, and projection of the elements in the environment (Endsley 2000). We believe that AIA is a special form of SA, specifically in the context of AI-powered smart technologies. There are three dimensions in AIA: the presence, the purpose, and the practice.

The first dimension of AIA is the presence of AI-powered smart technology. Presence refers to one's being aware of AI-powered smart technology in a situation. For example, when people walk into a conference room, they know there is a virtual assistant in the room, and they are able to interact with it. The second dimension of AIA is the purpose of AI-powered smart technology.

Purpose is one's awareness of how features of AI-powered smart technology could be used in a situation. How people use AI-powered smart technologies largely depends on how aware they are of the features of such technologies. For instance, when people know the features of virtual assistants, they can issue commands, administrate searches, or chat with virtual assistants. The third dimension of AIA is the practice of AI-powered smart technology. Practice refers to one's awareness of how AI-powered smart technology is being used in a situation.

Besides the three dimensions of AIA, we also include one other important construct in the AIA model: projection. In SA theory, projection indicates one's inference of the elements of the environment into the future (Endsley 2000). We see projection as one's evaluations and predictions of AI-powered smart technologies in a situation. Individuals either weigh the concerns and risks of AI-powered smart technologies (Dinev and Hart 2006) or they evaluate their emotional attachments to them (Carter and Grover 2015).

AIA model and hypotheses

We chose one AI-powered smart technology as the representative for this study: virtual assistants, which are software agents that can complete many daily tasks for their users by engaging with them via natural language (Harish et al. 2016; Pais et al. 2015). Figure 2 presents the proposed model for AIA with hypotheses: the sudden increase of AI awareness and people's reactions associated with that increase. After receiving stimuli in the environment, people experience an increase in awareness towards AI-powered smart technologies, and they are more likely to experience projection and have some reaction afterwards.

As time goes by, or as people become more familiar with AI-powered smart technologies, their AIA decreases. It becomes less likely that they will engage in projections of AI-powered

smart technologies. People engage with both cognitive and affective evaluations of the technologies during the projection phase. The evaluations then lead to three types of reactions: cognitive, affective, and behavioral. Not everyone experiences the three types of reactions at the same time. People likely experience at least one of them as the result of heightened AIA and projections. A feedback loop exists in the model, from the evaluations back to the stimuli. We believe that after people experience cognitive, affective, or behavioral reactions, these reactions all become part of their experiences with AI-powered smart technology. Since specific moments of users' interactions with technologies shape their future interactions (Goernemann and Spiekermann-Hoff 2020), people become more sensitive to similar stimuli based on their prior experiences.

Figure 2. AIA full model

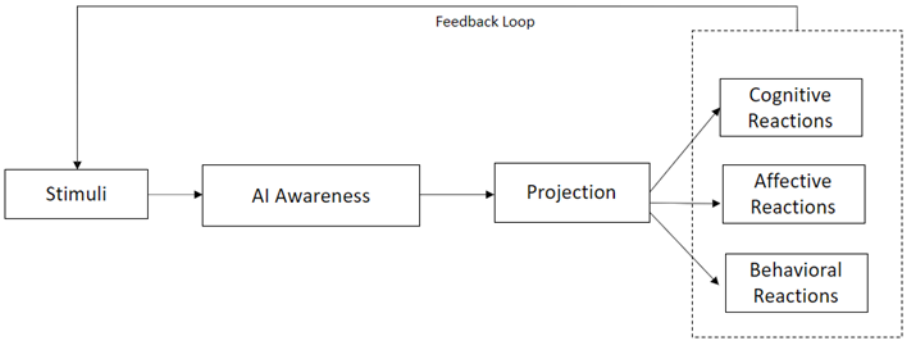

In this essay, we have developed the scale for AIA and tested the core model (shown in Figure 3). There are two parts in the projection: cognitive evaluation and affective evaluation. Cognitive evaluations are people's concerns or risks associated with AI-powered smart technology uses (Dinev and Hart 2006). Affective evaluations refer to one's emotional responses (relatedness, emotional energy, and dependence) when thinking of themselves in relation to AI-

powered smart technologies with which they interact (Carter et al. 2020). We believe that people will engage in either cognitive evaluations or affective evaluations as their AIA increases. Therefore, we believe that:

Hypothesis 1: People are more likely to experience projection as their AIA increases.

Figure 3: AIA core model with hypotheses numbers

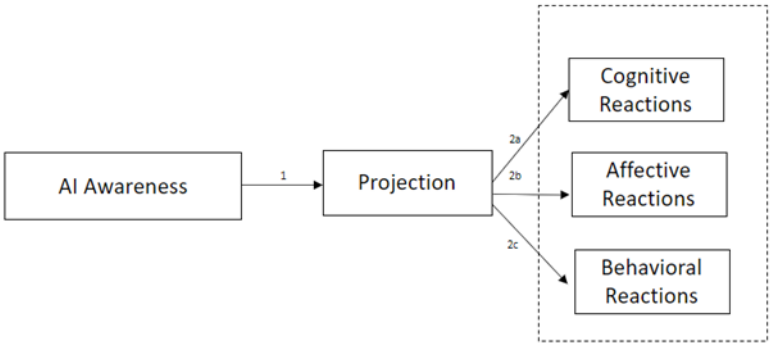

Cognitive, affective, and behavioral reactions occur at the end of projection following heightened AIA. Cognitive reactions are people's thoughts on AI-powered smart technology uses in a situation, affective reactions are people's emotions relating to technology uses in a situation, and behavioral reactions are their actions towards AI-powered smart technology in a situation. Although the three types of reactions are all due to heightened AIA and projections, they may not all occur at the same time. Therefore,

Hypothesis 2a: People are more likely to experience cognitive reactions at the end of projection.

Hypothesis 2b: People are more likely to have affective reactions at the end of projection.

Hypothesis 2c: People are more likely to emit behavioral reactions at the end of projection.

The Development of the Scale for AIA

Development of the measures for AIA

Since AIA is a new construct based on SA and its theory, we view it as a specialized form of SA in the context of AI. Therefore, AIA is a multidimensional construct, with each dimension providing a unique content domain for the construct. We have used the guidelines and the decision tree for conceptualizing multidimensional constructs in IS research (Polites et al. 2012). We decided to use the aggregate model-additive, as each dimension contributes separately to the meaning of AIA, with different weights.

We followed a multistep procedure to develop the scale (Churchill 1979). Based on a review of the literature, we developed measures for the AIA scale. Specifically, we conducted an expert panel to establish the content validity of the new measures. We used four faculty members and one full-time research staff member to help to assess the clarity of the construct definitions and items used to capture the constructs. Items were refined and modified through the process. We operationalized AIA as an aggregate second-order construct, which featured reflective indicators at the lower level and formative dimensions (Polites et al. 2012). The dimensions are *presence*, *purpose*, and *practices* of AIA. A complete set of items is presented in Appendix B7.

Development of the survey instrument

We designed a 2 by 2 experiment that crossed scenarios (home or work) with two levels of familiarity with the locations (one's own space versus another's space). We conducted one pilot study and two studies to capture AIA using the 16-item scale in two different scenarios: AI-powered smart technology uses at home and AI-powered smart technology uses at work. In

Study 1, we included two treatments in the home scenario: AI-powered smart technology uses at one's own house versus AI-powered smart technology uses at a friend's house.

Additionally, we included another two treatments for the office scenario in Study 2: AI-powered smart technology uses at one's own office versus AI-powered smart technology uses at a new client's office. Therefore, there are a total of four treatments in Study 2: AI-powered smart technology uses at one's own house, at a friend's house, at one's office, and at a client's office. We examined how people view general AI-powered smart technology uses, as well as incidents associated with virtual assistant uses in each scenario. Studying both general AI-powered smart technology uses and virtual assistant uses adds to the robustness of the findings and further illustrates the possibility that AI awareness can be applied to different types of AI-powered smart technologies in future studies.

There are two reasons why we chose home and work scenarios. First, we believe that AI awareness is not a static variable across different contexts. People can exhibit variations in their AIA levels from one context to another, even towards the same types of smart technologies. As SA suggests, researchers should consider the variances that different contexts may bring to individuals (Endsley 1995). Therefore, we include both the home scenario and the office scenario. At home, people can choose whether or not to install certain technologies; however, they may not have as much choice at work. We expect that the different scenarios help us to confirm the differences in the AIA levels.

Second, AI-powered smart technologies are becoming pervasive and intrusive in every aspect of our lives. It is beyond our control what smart technologies we deal with every day (Horowitz, 2020; Mihajlovis 2019). It is interesting to study AI-powered smart technology uses at other people's homes or offices. It is very likely that AI awareness, as a dynamic construct,

influences people's behaviors and decisions when they are at someone else's home or office. That is why we bring in two treatments for each scenario in this study. Examining AIA under varied contexts provides us with more opportunities to understand AI awareness as a dynamic construct. It also helps us to set up baselines for future scenarios that include other AI-powered smart technologies.

Summary of the studies

There are altogether three studies in this essay, including the Pilot Study. In the Pilot Study, we assessed and validated the items for the AIA scale via web-based surveys. We recruited the participants for the Pilot Study from MTurk. In Study 1, we tested items for the AIA scale in the home scenarios only. We invited students from a public university in the southern United States to participate. In Study 2, we tested items in the office scenarios. We recruited participants from Prolific. In both studies, we examined how AIA explains people's engagement in both cognitive evaluations and affective evaluations under different contexts. Then, we used the model to predict people's cognitive, affective, and behavioral reactions at the end. In the following sections, we present the procedures for each study and the findings.

Pilot Study: The Validation of the Scale for AIA

Since we were interested in capturing people's AIA in use situations, we expected that they had some prior experience with AI-powered smart technologies. We also had a filter question of whether they had used AI-powered smart technologies before. In the Pilot Study, 64 individuals who matched our sample description completed the survey via MTurk. Among those, 58 completed the survey successfully and were paid $0.85 for their time. We include the

participants' demographic information in Appendix B1. The data was collected and analyzed to identify measurement items that best represented the three dimensions of AIA. We also asked participants to rate whether the scenarios were realistic to them. Only one participant (1.7%) indicated that the scenario was not realistic to them.

There were altogether 16 items to capture the three dimensions of AIA, with 6 items in presence, 6 items in purpose, and 4 items in practice. We performed reverse coding for cognitive concerns items and the last two of the Behavioral Reaction items due to the negative connotation embedded in the items' wording.

We conducted preliminary analysis on the data from the Pilot Study, including extreme value tests, non-response bias, skewness, and kurtosis (Tabachnick & Fidell, 2007). There was no extreme value, and the data is within the acceptable range regarding skewness and kurtosis. The acceptable range for skewness is from -2 to +2, and for kurtosis, between -7 and +7 (Byrne 2010; Hair et al. 2010). We ran the non-response bias using comparison between early responses and late responses. We then ran the Harman's single factor analysis to check common method bias issues (Podsakoff et al. 2003). The variances explained by the factors we had is below 30%. Therefore, there was no issue with common method bias. We include the pre-test results in Appendix B8. We treated both AIA and projection as first level reflective and second level formative constructs. The three types of reactions are treated as reflective constructs.

We needed to check the loadings of the measurement items on the latent constructs explicitly displayed in the model; therefore, we chose PLS to perform the Confirmatory Factor Analysis (CFA). The fit of the measures is determined by its convergent and discriminant validities (Gefen and Straub 2005). We discuss the details of the validities in the next section.

In order to analyze the cause-effect relationships between the latent constructs AIA and projection, we chose partial least squares SEM (PLS-SEM) as the statistical method to run the model. The primary objective of PLS-SEM is to maximize explained variance in the dependent variables, even with increased model complexity. It has fewer restrictions on the data assumptions so that it can be applied to a broader range of inquiries (Hair et al. 2011). Hence, it can work with both smaller sample sizes and larger sample sizes. The recommendation for the minimum numbers of observations ranges from 30 to 100 cases (Sarstedt et al. 2014). PLS-SEM allows us to examine relationships between latent constructs and configure the associations between the indicators and constructs for the AIA model (Rodríguez-Entrena et al. 2018). We used SmartPLS3 as the statistical tool.

There are two parts in a structural equation model with latent constructs: the measurement models and the structural model (Hair et al. 2011). The measurement models involve the testing of the relationships between the indicators (or items) and each latent construct. In the Pilot Study, we needed the measurement models to establish the validities of the measures we had developed. If our measures successfully captured AIA, we could move on to the test of AIA's relationship with other latent constructs in the model. The structural model refers to the paths between the latent constructs. In this essay, we have two latent constructs: AIA and Projection. AIA is the exogenous construct. Endogenous constructs are latent target constructs that are explained by the exogenous construct via structural model relationships. Therefore, Projection is the endogenous construct in the structural model.

We needed to run two-step assessments of the measurement models and the structural model (Hair et al. 2011). We did not move on to the second step until we were confident that we had captured AIA with our measures in the first step.

Analysis and results

Reflective measurement model and analysis

This section contains the results of the measurement models for the Pilot Study. As for the indicators for each dimension of AIA, we expected the indicators (or items) to load to their corresponding dimensions. Therefore, we have used CFA to check the factor loadings for each item. There is no consensus as to what constitutes a "high" factor loading in general or specific research conditions (Peterson 2000). Based on the general literature in social and behavioral research, +- 0.30 is viewed as the minimal level and +- 0.50 as the practically significant level (Hair et al. 1998; Merenda 1997). Table 3 shows that two of the items in the Pilot Study had factor loadings less than the recommended value of 0.50 (Hair et al. 2010). Therefore, we removed those two items from purpose: pur1 and pur2. We focus mainly on the construct of AIA; in this part, we refine and validate the measures of AIA. We include the factor loadings for all the constructs for Pilot Study in Appendix B2.

Table 3. Factor loadings for AIA items for Pilot Study

	Presence	**Purpose**	**Practice**
pre1	0.873		
pre2	0.894		
pre3	0.906		
pre4	0.776		
pre5	0.814		
pre6	0.796		
pur1		0.166	
pur2		0.481	
pur3		0.644	
pur4		0.640	
pur5		0.930	
pur6		0.777	
pra1			0.882
pra2			0.811

pra3	0.880
pra4	0.839

The factor analysis also confirms reliability, discriminant validity, and convergent validity for each dimension of the AIA scale. *Reliability* is defined as the extent to which a measurement item is consistent and repeatable. A reliable instrument should yield the same results when administered repeatedly (Mark 1996). The most common methods to establish reliability include Cronbach's Alpha and composite reliability (CR). The results for both Cronbach's Alpha and CR are listed in Table 4. Cronbach's Alpha ranges from 0.813 to 0.924, whereas CR ranges from 0.793 to 0.937. The reliability threshold is 0.70 (Hair et al 2011). Hence, the construct of AIA's reliability is established.

Table 4. *Construct Reliability Analysis (Cronbach's Alpha and Composite Reliability) for Pilot Study*

	Cronbach's Alpha	**Composite Reliability**
Presence	0.924	0.937
Purpose	0.813	0.793
Practice	0.877	0.915

We then followed the suggestions from Gefen and Straub (2005) to check the factorial validity of Presence, Purpose, and Practice, by running analyses on convergent validity and discriminant validity. Convergent validity is "the degree to which multiple attempts to measure the same concept are in agreement. The idea is that two or more measures of the same thing should covary highly if they are valid measures of the concept" (Bagozzi et al. 1991, p.425). Within the three dimensions for AIA, we expected that the items for each dimension would covary highly, showing that the items are measuring the same dimension. When the value of average variances extracted (AVE) is greater than the recommended value of 0.50, convergent validity is established (Fornell and Larcker 1981; Hair et al. 2011). However, the original

Purpose had an AVE score of 0.425 before we removed the poorly loaded items 1 and 2. Table 5 shows the AVE values for each of the dimensions in AIA after we dropped the poorly loaded items from Purpose. After we removed the poorly loaded items from Purpose, the AVE score for Purpose increased to 0.609. Therefore, we are confident that the convergent validity for the dimensions of AIA is established.

Table 5. Construct Convergent Validity (AVE) after dropping the poorly loaded items from purpose

	Average Variance Extracted (AVE)
Presence	0.714
Purpose	0.609
Practice	0.730

We then moved on to the test of discriminant validity of the measures. Discriminant validity is defined as "the degree to which measures of different concepts are distinct. The notion is that if two or more concepts are unique, then valid measures of each should not correlate too highly" (Bagozzi et al. 1991, p.425). Although the items are all related to the construct of AIA, they capture different dimensions of the construct: Presence, Purpose, and Practice. We expect to see that the items capturing one dimension are distinct from the items from a different dimension. Discriminant validity is established when the square root of AVE for one dimension is higher than its correlation with all other dimensions of AIA (Fornell and Larcker 1981). Table 6 contains the square root of AVE for each dimension and its correlations with other dimensions. The square root of AVE for each dimension is provided in bold.

Since Presence, Purpose, and Practice are three dimensions contributing to AIA, we expect them to covary to some extent because of their relationships with the construct (Polites et al. 2012). That is why we observe some high correlations among the three dimensions in Table 4. The items for Practice and the ones for Presence covary at 0.720. The discriminant validity is

established, because each dimension has the highest item loading compared to the other dimensions.

Table 6. Discriminant Validity—Fornell and Larcker Criterion for Pilot Study

	Presence	**Purpose**	**Practice**
Presence	**0.845**		
Purpose	0.631	**0.781**	
Practice	0.720	0.678	**0.854**

Structural model analysis

This is the second step in the analysis of the data from the Pilot Study, containing the results of the structural model. Before running the structural model analysis, we wanted to establish higher-order construct validity for AIA. We needed to check whether the three dimensions of AIA uniquely contribute to the formation of AIA, as we proposed in this essay.

AIA is a higher-order construct based on three lower-level dimensions: Presence, Purpose and Practice. In order to establish higher-order construct validity for a formative construct, we check its variance inflation factor (VIF), outer weights, and outer loadings (Petter et al. 2007). Multicollinearity is evaluated based on the VIF statistics. Values larger than the recommended value indicate potential problems with a Type II error. All VIF values (see Table 7) are less than the recommended value of 5 (Ringle et al. 2015). Therefore, multicollinearity does not occur in AIA.

We then check whether the outer weights are significant (Hair et al. 2016). A significance level suggests that the dimension is relevant and valid for the higher-level construct (Urbach et al. 2010). In this case, if the outer weights are significant, the dimension contributes to the measures of AIA in a substantive way. Unfortunately, both Presence and Purpose do not contribute significantly to the formation of AIA. When the outer weights are not significant, we

move on to check the outer loadings for them. The outer loadings for Presence and Purpose both reach the 0.50 threshold (Sarstedt et al. 2019). Hence, we can conclude that AIA has achieved higher-order construct validity.

Table 7. Higher-order construct validity table for Pilot Study

HOC	LOC	Outer Weights	T Statistics	P Values	Outer Loadings	VIF
AIA	Presence	-0.215	0.395	0.347	0.627	2.171
	Purpose	0.256	0.546	0.287	0.761	1.828
	Practice	0.964	1.884	0.003**	0.976	2.513
Projection	Affective evaluation	0.730	5.484	0.000**	0.888	1.119
	Cognitive evaluation	0.486	4.088	0.000**	0.724	1.119

*p < 0.05
**p < 0.01

The primary evaluation standards for the structural model are the R-squared and the level of significance of the path coefficient (Hair et al. 2011). Figure 4 contains the Pilot Study results for the structural models with AIA through Projection then leading to cognitive, affective, and behavioral reactions. Although the relationship between AIA and Projection is significant, the predictive power of AIA to projection is relatively weak because the R-squared for Projection is only at 0.149. Based on marketing research studies, 0.25 for endogenous latent variables in the structural model indicates a weak driver and 0.50 indicates a moderate driver (Hair et al. 2011). On the other hand, we can see moderate and significant relationships between Projection and the three types of reactions. Hence, there is a significant but rather weak positive relationship between one's AIA and one's Projection. We are confident that with the increase in one's Projection we can see a substantial increase in one's reactions towards AI-powered smart technology uses.

Figure 4. AIA core model with results from Pilot Study

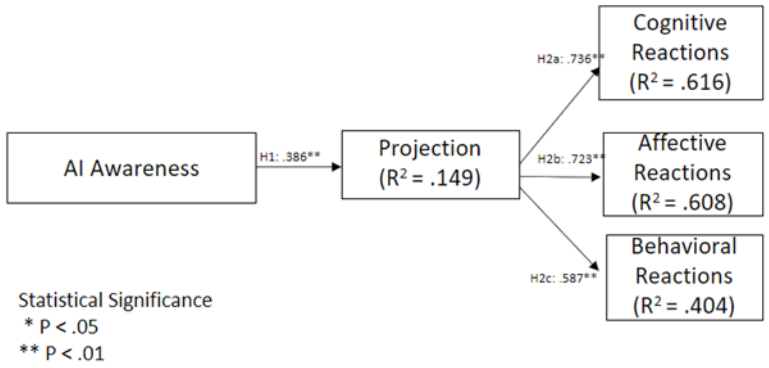

Overall, the Pilot Study helps us refine the measures for AIA by removing two poorly loaded items from Purpose. The results of the Pilot Study present initial evidence for the scale's reliability as well as its convergent and discriminant validity. We are able to cut down the measures for AIA to 6 items in the dimension of presence, to 4 items in purpose, and to 4 items in practice. All of the hypotheses are supported by the Pilot Study. Appendix B presents additional tables and results from the analyses we have done for the Pilot Study.

Study 1: AIA with Student Participants

To further evaluate the validity of the AIA scale, Study 1 was designed to assess AIA in home scenarios. We asked college students enrolled in undergraduate-level management information systems courses to take the survey. We chose college students because this group has experienced accelerated technological growth and use of mobile phones (Carter et al. 2020). Voice assistants on smartphones have high trial rates within this group. One report shows that 80.5% of people within the age group 18–29 have used a voice assistant on their smartphones (Kinsella 2019). Thirty-two percent of people who are between 18 and 29 say they have a voice-

controlled smart speaker in their home (Auxier 2019). Thus, college students are the ideal participants with prior experience with AI-powered smart technology use in home scenarios.

After the students read the consent and agreed to participate in the study, we presented them with the scenarios of using AI-powered smart technologies in their house or at their friend's house. Each participant was randomly put into one of the home scenarios. We aimed (1) to evaluate and refine the scale's internal validity and external validity across home contexts; (2) to further validate the construct's discriminant and divergent validities; and (3) to check the relationship between latent constructs. Appendix C provides tables and detailed results for Study 1. We used SmartPLS3 to perform the same statistical analyses as in Study 1.

Data collection

During the fall 2021 semester, 1,200 students from a southern public university were invited to take the survey as an extra credit opportunity. The survey was available to them for one week. Students were provided alternative extra credit opportunities if they preferred not to participate in the study. More than 650 students took the survey. After removing those with incomplete or invalid answers, we had 531 usable responses. Each student who completed the survey successfully was awarded 5 bonus points towards their final grade.

We conducted preliminary analysis on the data, including extreme value tests, non-response bias, skewness, and kurtosis (Tabachnick & Fidell 2007). There was no extreme value, and the data is within the acceptable range regarding skewness and kurtosis (Byrne 2010; Hair et al. 2010). We ran the non-response bias by the comparisons between early responses and late responses (see Appendix C10). We then ran the Harman's single factor analysis to check common method bias issue (Podsakoff et al. 2003). The variances explained by the factors are

27%. Therefore, there was no issue with common method bias. We include the pre-test results for Study 1 at the end of the Appendix C in Table C9.

The data from Study 1 included 52.9% men and 46.5% women, 99% of them between the ages of 18 and 24. Since they are mostly undergraduate students, only 2.3% have received postgraduate degrees. It is not surprising to see that 89.1% of them chose *student* as their occupation. The majority of them are Republican (68.4%), followed by 15.1% as independent and 9.4% as Democrat.

The majority of them (58.8%) have used AI-powered smart technologies for more than 5 years, with 46.3% of them claiming mainly to use AI-powered smart technologies everywhere in the house. There are 24.5% who mainly use AI-powered smart technologies in bedrooms, whereas 22.4% use the technologies in living rooms.

Analysis and results

As in the Pilot Study, we performed two-step analysis using PLS-SEM (Hair et al. 2011). The first step was to establish the validity of the measures of AIA through measurement model analysis. Then we moved on to the second step of running the structural model for the latent constructs. We present the results and the tables for Study 1 in the following sections.

Reflective measurement model analysis

The table below contains the factor loadings for AIA from Study 1. All factor loadings for AIA items are above the recommended value of 0.50 (Hair et al. 2016) after we delete items from Presence (pre 1.6) and Purpose (pur 1.4) for future analysis. Hence, we refine AIA to a 12-item measure.

Table 8. Factor Loadings for AIA in Study 1

	Presence	Purpose	Practice
pre1	0.706		
pre2	0.755		
pre3	0.768		
pre4	0.732		
pre5	0.746		
pur1		0.780	
pur2		0.828	
pur3		0.802	
pra1			0.816
pra2			0.804
pra3			0.877
pra4			0.811

The results for both Cronbach's Alpha and composite reliability were checked. The reliability threshold is 0.70 (Hair et al 2011). The Cronbach's Alpha ranges from 0.725 to 0.905, whereas the composite reliability ranges from 0.845 to 0.926. Hence, construct reliability for AIA is established. We include the tables of all the constructs' reliability and CR in Appendix C4. When the value of AVE is greater than the recommended value of 0.50, convergent validity is established (Fornell and Larcker 1981). The only AVE that is below the suggested threshold is from Behavioral Reaction, which is 0.413. However, convergent validity is established for AIA and Projection. We include the table for convergent validity for all the constructs from Study 1 in the Appendix C5.

An important part in the measurement model is discriminant validity. Table 9 contains the square root of AVE for the constructs and its correlations with other constructs. The square roots of AVE for the constructs are given in bold. Discriminant validity is established because each dimension has the highest item loading compared to other dimensions (Hair et al. 2011).

Table 9. Discriminant Validity—Fornell and Larcker Criterion for Study 1

	Presence	Purpose	Practice	Cognitive evaluation	Affective evaluation
Presence	**0.742**				
Purpose	0.498	**0.804**			
Practice	0.423	0.329	**0.828**		
Cognitive evaluation	-0.254	-0.106	-0.126	**0.866**	
Affective evaluation	0.131	0.149	0.368	-0.029	**0.822**

Structural model analysis

AIA is a higher-order construct based on three lower-level constructs: Presence, Purpose and Practice. In order to establish higher-order construct validity, VIF values were first checked, and they are below the recommended value of 5 (Hair et al. 2016). There is no issue of multicollinearity. We then check whether the outer weights are significant (Hair et al. 2016). A significance level suggests that the dimension is relevant and valid for AIA (Urbach et al. 2010). However, the outer weight for Purpose is not significant (See table 10). Therefore, we check its outer loadings. However, the outer loading is only 0.322 and does not reach the 0.50 threshold for the lower-order constructs, either (Sarstedt et al. 2019).

As a formative construct, we expect that each dimension of AIA will contribute uniquely to AIA. Low outer loadings suggest that Purpose does not contribute as substantively as the other two dimensions in AIA. According to the literature, formative indicators compete with one another to explain a higher-level construct (Cenfetelli and Bassellier 2009). Therefore, it is not unusual to see non-significant indicators in the formative construct. Since Purpose is an important dimension in AIA, helping us to capture people's understanding of AI-powered smart technology uses in a situation, we decide to keep Purpose because we do not want to omit this unique part of AIA or change the meaning of AIA. Purpose helps us to maintain the content

validity of AIA. In order to avoid errors of omission, we keep Presence, since there is no problem of multicollinearity (Diamantopoulos 2011; MacKenzie et al. 2005)

Table 10. Higher-Order Construct Validity for Study 1

HOC	LOC	Outer Weights	T Statistics	P Values	Outer Loadings	VIF
AIA	Presence	-0.424	2.269	0.012*	0.122	1.480
	Purpose	0.182	1.143	0.127	0.322	1.361
	Practice	1.056	17.933	0.000**	0.940	1.246
Projection	Affective evaluation	0.952	30.231	0.000**	0.942	1.001
	Cognitive evaluation	-0.336	4.421	0.000**	-0.309	1.001

*p < 0.05
**p < 0.01

In the SEM, we find that AIA has no significant impact on Projection (shown in Figure 5). Therefore, the data suggest that people who have higher AIA are not likely to engage in either cognitive evaluations or affective evaluations. Then, as they engage in Projection, they are more likely to have significantly more numerous predicted cognitive, affective, and behavioral reactions towards AI-powered smart technology uses in home scenarios.

Figure 5. AIA core model with results from Study 1

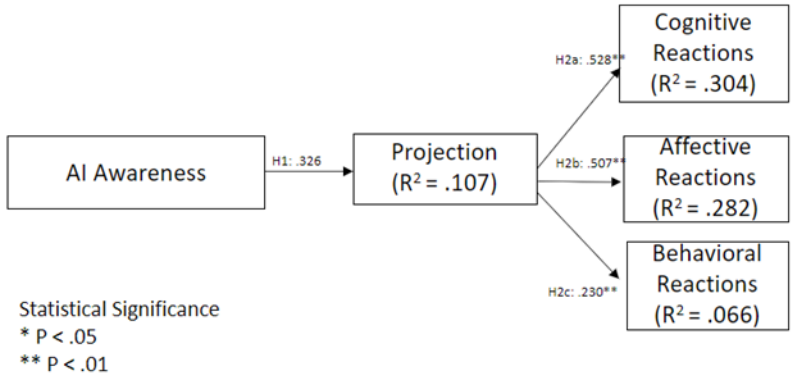

Study 1 helps us to further refine the measures for AIA by removing two more poorly loaded items, one from Presence and one from Purpose. Now, we finalize the measures for AIA with 12 items, with 5 in Presence, 3 in Purpose, and 4 in Practice. We have mixed findings for the AIA model. Although the data supports our hypotheses on the relationships between Projection and the three types of reactions, the relationship between AIA and Projection is found to be non-significant in the home scenarios. The relationship between Projection and Cognitive Reactions is the strongest, with R-squared of 0.304. On the other hand, the relationship between Projection and Behavioral Reaction is the weakest. This indicates that the AIA model does not predict people's behavioral reactions well in the home scenarios. Appendix C presents additional tables and results from Study 1.

Study 2: AIA at Home and at Work

In Study 2, we recruited over 300 participants from Prolific. This website is known for its high-quality participant pool and fast and reliable responses (Peer et al. 2017; Palan and Schitter 2017). In order to find participants intended for the second study, we used the Prolific screeners to find a representative sample, whereas we did not use any screener in MTurk for the Pilot Study. In Study 2, with the help of the Prolific screeners and our filter question, we were able to choose participants who (1) speak English, (2) are going to the office physically even during the COVID pandemic, and (3) have used AI-powered smart technologies before. It was important for us to have participants who actually go to their offices physically because we have designed scenarios containing AI-powered smart technology uses at the workplace. We aimed (1) to investigate the relationships between AIA, projection, and the three types of reactions in

different situations; (2) to examine whether people's AIA levels change across different situations.

Data collection

We recruited a total of over 300 people from the Prolific website on two separate dates, December 2nd and December 10th, 2021. We cannot record a fully accurate number of participants because we removed responses under 6 minutes and responses with invalid codes during the data collection. By removing these invalid responses, Prolific allowed more participants to come in and take the available spots. In this round of the study, we presented each participant with one of the four treatments we designed: one's own home, a friend's home, one's own office, or one's client's office. In other words, each participant had a 25% chance of being given the scenario of one's own home, a friend's home, one's own office, or one's client's office.

After removing the incomplete or invalid responses, we had 269 usable responses. We conducted preliminary analysis on the data for Study 2, including extreme value tests, skewness, and kurtosis (Tabachnick & Fidell 2007). There was no extreme value, and the data is within the acceptable range regarding skewness and kurtosis (Byrne 2010; Hair et al. 2010). We did not run non-response bias tests because both of the data collections were completed within 20 minutes. We ran the Harman's single factor analysis to check common method bias issue (Podsakoff et al. 2003). The variances explained by the factors are 35%. Therefore, there was no issue with common method bias. We include the pre-test results at the end of Appendix D.

The participants for Study 2 consisted of 53.2% men and 45% women, 90% of them between the ages of 18 and 34. About 60% have received an associate's degree or higher, and

another 22.3% have received some college education but no degree. Among the participants, 56% of them report their occupational field as either service, sales, or management professionals. The majority are either Democrat (34.6%) or something else (34.6%), following by 22.7% as independent and 8.2% as Republican. We also asked participants whether they were living with children. One hundred ninety-eight (73.3%) of the participants live with no children.

We also had some questions regarding participants' usage of AI-powered smart technologies. The majority (59.5%) have used AI-powered smart technologies for more than 3 years, with 43.9% claiming to use AI-powered smart technologies mainly in the living room. There are 27.5% using AI-powered smart technologies mainly in the bedroom, whereas 23% of them use the technologies everywhere in the house.

Table 11. Results for AI-powered smart technologies identified by home scenario participants

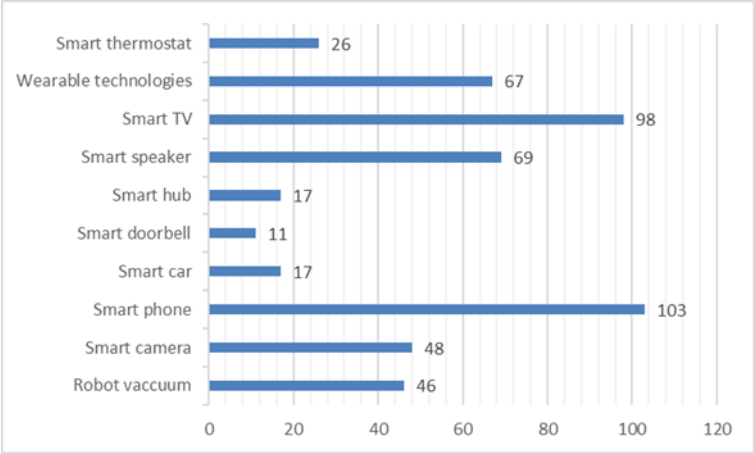

Table 12. Results for AI-powered smart technologies identified by office scenario participants

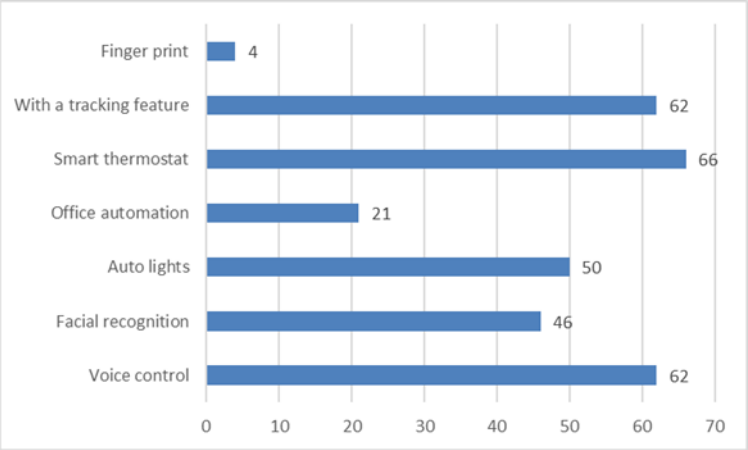

Among the 269 usable responses, 134 participants were given the work scenarios, whereas 135 participants were given the home scenarios. We asked participants to identify AI-powered smart technologies that they had used before. The top three most-identified AI-powered smart technologies in the home scenario were smartphones, smart TVs, then smart speakers and wearable technologies (shown in Table 11). The top three most-identified AI-powered smart technologies in the office scenario were smart thermostats, devices with tracking features, and voice control (shown in Table 12).

Analysis and results

We had viewed AIA as an aggregate second-order construct in the Pilot Study and Study 1. However, we made some changes in the analysis of AIA in this study. In Study 2, we ran the lower level of AIA as formative instead of reflective. This is the only change from the previous studies. We then moved to a higher order of the constructs as formative and then tested the models. We include the cross-loading table for Study 2 in the Appendix D Table D2, since Cognitive Evaluation, Affective Evaluation, Cognitive Reaction, Affective Reaction, and Behavioral Reaction use reflective indicators.

Formative measurement model and analysis

We mapped AIA as a first level formative and second level formative aggregate construct. The items for each dimension of AIA were treated as reflective indicators in the Pilot Study and Study 1. However, after close examination, we believe that the items for each dimension of AIA are not interchangeable. Interchangeability is an important quality for reflective indicators (Petter et al. 2007). However, the items for each dimension are not redundant and capture different aspects of the dimension. For example, the items for Purpose capture different functions of AI-powered smart technologies. One of the items focuses on the predictive features of AI-powered smart technology, whereas another item focuses on the recommending feature.

Furthermore, reflective indicators do not cause the changes in the latent variable. They reflect the changes in the latent variable. However, the changes and the values of formative indicators determine the changes and the values of the latent variable (Diamantopoupos et al. 2008). We believe the items developed to capture Presence, Purpose, and Practice are formative indicators because they cause changes in each of the AIA dimensions. Therefore, we treat AIA as a first-level formative and second-level formative construct. We used SmartPLS3 as the statistical tool in Study 2, due to its ability to run both reflective and formative measurement models (Hair et al. 2011).

We needed to focus on different aspects of the analysis in order to evaluate formative measurement models. We first assessed the level of collinearity in the formative measurement model. The cut-off value for multicollinearity is 5 (Hair et al. 2011; Ringle et al. 2015). Table 13 presents the VIF values for the indicators of each dimension of AIA and reveals that each indicator is below the recommended threshold. There is no multicollinearity issue.

Table 13. Multicollinearity statistics (VIF) for formative indicators in Study 2

	VIF
Pre1	1.711
Pre2	1.672
Pre3	1.309
Pre4	1.424
pur1	1.124
pur2	1.304
pur3	1.329
pra1	2.006
pra2	1.787
pra3	2.354

After assessing the level of collinearity, we analyzed the significance of outer weights then interpreted the indicators' absolute and relative contributions to each dimension of AIA (Hair et al. 2011). Table 14 contains the outer weights for each indicator of the three dimensions of AIA. The only significant outer weights are one item from Presence, one item from Purpose, and one item from Practice. The rest of the indicators are not significant. When the outer weight is not significant, we analyze and check the indicator's outer loadings (Urbach et al. 2010). Therefore, we moved on to check the outer loadings of the indicators for each dimension of AIA.

Table 14. Outer weights for indicators in Study 2

	Original Sample	P Values
Pre1 -> Presence	0.275	0.187
Pre2 -> Presence	0.169	0.306
Pre3 -> Presence	0.814	0.000**
Pre4 -> Presence	0.033	0.451
pur1 -> Purpose	-0.435	0.203
pur2 -> Purpose	0.147	0.339
pur3 -> Purpose	0.972	0.007**
pra1 -> Practice	0.088	0.318
pra2 -> Practice	0.656	0.000**
pra3 -> Practice	0.237	0.115

pra4 -> Practice	0.189	0.093

* p < 0.05
** p < 0.01

Table 15 contains the outer loadings for the indicators. We keep an indicator as long as its outer loading is greater than 0.50 (Hair et al. 2011). Only one indicator (pur1) from Purpose had outer loadings less than the desirable 0.50 threshold and was not significant. As stated earlier, formative indicators compete with one another to explain the higher-level construct (Cenfetelli and Bassellier 2009). Therefore, it is not unusual to see non-significant indicators in the formative construct. We see that pur1 covers a different aspect regarding people's understanding of the functions of AI-powered smart technologies. It is different from pur2 and pur3. Hence, we have decided to keep pur1 because we do not want to omit this unique part of Purpose or change the meaning of Purpose. In order to avoid errors of omission, we keep pur1 since there is no problem with multicollinearity (Diamantopoulos 2011; MacKenzie et al. 2005).

Table 15. Outer loadings for indicators in Study 2

	Original Sample	**P Values**
Pre1 -> Presence	0.547	0.004**
Pre2 -> Presence	0.515	0.011*
Pre3 -> Presence	0.917	0.000**
Pre4 -> Presence	0.508	0.007**
pur1 -> Purpose	-0.106	0.401
pur2 -> Purpose	0.480	0.045*
pur3 -> Purpose	0.909	0.002**
pra1 -> Practice	0.694	0.000**
pra2 -> Practice	0.943	0.000**
pra3 -> Practice	0.813	0.000**
pra4 -> Practice	0.676	0.000**

* p < 0.05
** p < 0.01

Structural model analysis

AIA is a higher-order construct based on three lower-level constructs: Presence, Purpose, and Practice. In order to establish higher-order construct validity, we first checked VIF for multicollinearity issues (shown in Table 16). Then we examined whether the outer weights were significant or not (Hair et al. 2011). Only Presence did not reach the 0.50 threshold for the lower order constructs (Sarstedt et al. 2019). When the outer weights were not significant, we checked the outer loadings for Presence. Although the outer loading for Presence is less than 0.50, we still accept it because it is significant (Hair et al. 2016).

Table 16. Higher-Order Construct Validity in Study 2

HOC	LOC	Outer Weights	T Statistics	P Values	Outer Loadings	VIF
AIA	Presence	0.139	1.146	0.126	0.466	1.146
	Purpose	0.331	2.654	0.004**	0.506	1.042
	Practice	0.821	8.639	0.000**	0.934	1.179
Projection	Cognitive evaluation	0.219	2.499	0.006**	0.254	1.001
	Affective evaluation	0.968	31.961	0.000**	0.976	1.001

* $p < 0.05$
** $p < 0.01$

Figure 6 shows the results for the structural model in Study 2. There is a weak but significant relationship between AIA and Projection. We can also see significant impact on the three types of reactions from Projection. Hence, our hypotheses are supported by the data from Study 2. Since the R-squares range from 0.194 to 0.248, the explanatory power of the structural model is weak (Hair et al. 2011)

Figure 6. AIA core model with results from Study 2

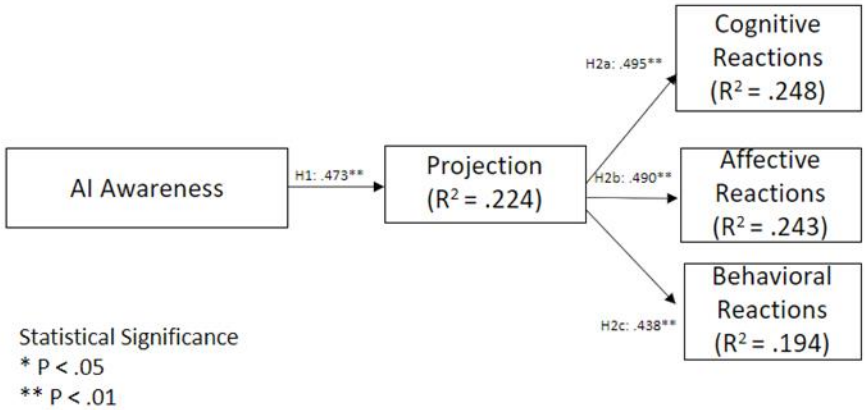

We also find the total mediating effects of Projection between AIA and the three types of reactions, with p-values less than 0.01 (see Table 17). Therefore, Projection acts as a complete mediator between people's AIA and their reactions towards the incidents caused by AI-powered smart technologies.

Table 17. Mediating effects in Study 2

	Original Sample	Sample Mean	Standard Deviation	T Statistics	P Values
AIA -> Projection -> Cognitive Reaction	0.234	0.238	0.004	5.715	0.000**
AIA -> Projection -> Affective Reaction	0.232	0.236	0.037	6.042	0.000**
AIA -> Projection -> Behavioral Reaction	0.207	0.209	0.034	5.996	0.000**

* p < 0.05
** p < 0.01

Post-hoc analysis

We presented two scenarios in the survey: home and office. In each scenario, we provided participants with treatment of AI-powered smart technologies in either familiar or unfamiliar situations. Therefore, we had a total of four treatment groups. Each participant only received

one treatment. In order to examine the differences among treatment groups, we ran the multivariate tests. We used IBM SPSS version 25 to perform the MANOVA and other tests in the post-hoc analysis. Table 18 contains the multivariate test results for the treatment groups. There is a statistically significant difference in AIA and related measures based on the treatment groups, $F(24, 748.880) = 1.582$, $p < 0.05$; Wilk's $\Lambda = 0.866$, partial η squared = 0.047.

Table 18. Multivariate tests for treatment groups in Study 2

Effect		Value	F	Hypothesis df	Error df	Sig.	Partial Eta Squared
Intercept	Pillai's Trace	0.989	2986.796	8.000	258.000	0.000**	0.989
	Wilks' Lambda	0.011	2986.796	8.000	258.000	0.000**	0.989
	Hotelling's Trace	92.614	2986.796	8.000	258.000	0.000**	0.989
	Roy's Largest Root	92.614	2986.796	8.000	258.000	0.000**	0.989
Group	Pillai's Trace	0.139	1.584	24.000	780.000	0.038*	0.046
	Wilks' Lambda	0.866	1.582	24.000	748.880	0.038*	0.047
	Hotelling's Trace	0.148	1.580	24.000	770.000	0.039*	0.047
	Roy's Largest Root	0.079	2.574	8.000	260.000	0.010*	0.073

* $p < 0.05$
** $p < 0.01$

We then performed a one-way ANOVA and Tukey's HSD post-hoc tests to see how treatment groups differ from each other. Table 19 contains the one-way ANOVA table, and Table 20 is the multiple comparisons table from the Tukey's tests. Based on the results of the ANOVA tests (Table 19), there is a statistically significant difference in AIA, purpose of AIA, and practice of AIA among different treatment groups.

The Tukey's test (see Table 19) allows us to further examine which treatment groups have significant differences regarding AIA and its dimensions. A significant difference between groups is detected in AIA, Purpose, and Practice. This indicates that people do see the functions and the practices of AI-powered smart technologies differently in different situations. As a

result, their AIA changes according to the situation. There are no significant differences in Presence between different treatment groups. This suggests that people's perception of the Presence of AI-powered smart technologies does not change with the situation or context. In other words, people do not view the Presence of AI-powered smart technologies differently when they are home and when they are at the office.

Table 19. One-way ANOVA for AIA and its dimensions

		Sum of Squares	df	Mean Square	F	Sig.
AIA	Between Groups	778.096	3	259.365	5.701	0.001**
	Within Groups	12056.945	265	45.498		
	Total	12835.041	268			
Presence	Between Groups	63.416	3	21.139	2.200	0.088
	Within Groups	2545.751	265	9.607		
	Total	2609.167	268			
Purpose	Between Groups	52.710	3	17.570	3.632	0.013*
	Within Groups	1282.041	265	4.838		
	Total	1334.751	268			
Practice	Between Groups	185.969	3	61.990	5.013	0.002**
	Within Groups	3276.708	265	12.365		
	Total	3462.677	268			

* $p < 0.05$
** $p < 0.01$

The multiple comparisons table (Table 20) shows that one's AIA is significantly different when participants are in the home familiar situation and office familiar situation ($p = 0.006$). There is also a significant difference between participants in the familiar home situation and the unfamiliar office situation ($p = 0.001$). In Appendix D, we include the full comparisons table, with AIA and its dimensions as the dependent variables.

Table 20. Multiple comparisons table for AIA in study 2

Dependent Variable	(I) Group	(J) Group	Mean Difference (I-J)	Std. Error	Sig.
AIA	HomeFamiliar	HomeUnfamiliar	2.80180	1.16110	0.077
		OfficeFamiliar	3.83824	1.15679	0.006**
		OfficeUnfamiliar	4.41578	1.16553	0.001**

HomeUnfamiliar	HomeFamiliar	-2.80180	1.16110	0.077
	OfficeFamiliar	1.03644	1.16110	0.809
	OfficeUnfamiliar	1.61398	1.16980	0.513
OfficeFamiliar	HomeFamiliar	-3.83824	1.15679	0.006**
	HomeUnfamiliar	-1.03644	1.16110	0.809
	OfficeUnfamiliar	.57754	1.16553	0.960
OfficeUnfamiliar	HomeFamiliar	-4.41578	1.16553	0.001**
	HomeUnfamiliar	-1.61398	1.16980	0.513
	OfficeFamiliar	-.57754	1.16553	0.960

* p < 0.05
** p < 0.01

Comparison between treatment groups

In this part, we discuss and compare the results for the structural models with four treatment groups. First, we compare the model results for when people are in their own home and in a friend's home (see Figure 7). We then compare the model results for when people are at their own office and at their client's office (see Figure 8). Lastly, we compare the model results based on whether the situations are familiar to them or not familiar to them. The familiar situations include people in their own home and in their own office (see Figure 9), and the unfamiliar situations include people at a friend's home and at a client's office (see Figure 10).

Figure 7. AIA core models with home situations comparison from Study 2

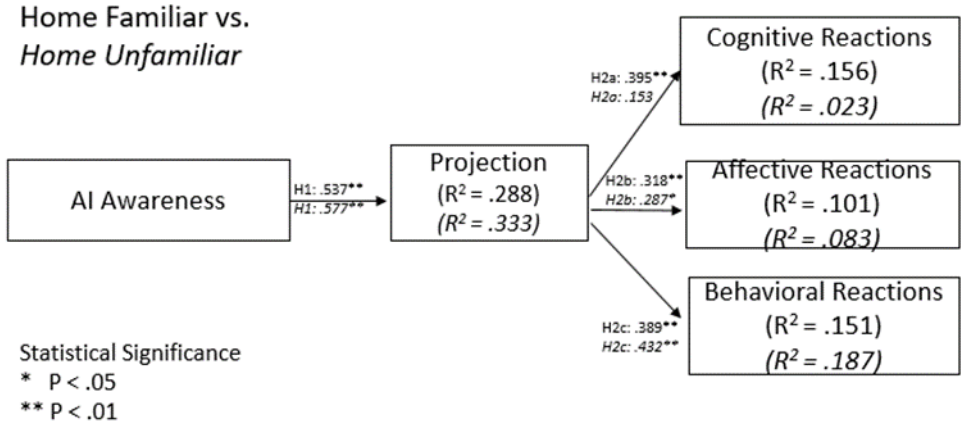

Figure 7 shows the comparison of the model results for people's AIA, Projection, and reactions when they are assigned to the home scenarios in Study 2. The R-squares indicate how much variance the relationship explains. AIA is able to explain more variances in one's Projection when he or she is at a friend's house (R-square = 33%). This indicates that people engage in more cognitive evaluations or affective evaluations regarding AI-powered smart technologies when they are at a friend's home. The reactions contain a list of people's thoughts, feelings, and actions towards AI-powered smart technologies after the incident. People have similar emotional and behavioral reactions to the incident in both home scenarios. However, there is a large difference in their cognitive reactions. When people are in their own home, they are more likely to think AI-powered smart technologies are wonderful and useful despite the incident, compared to when they are at a friend's house.

Figure 8. AIA core models with office situations comparison from Study 2

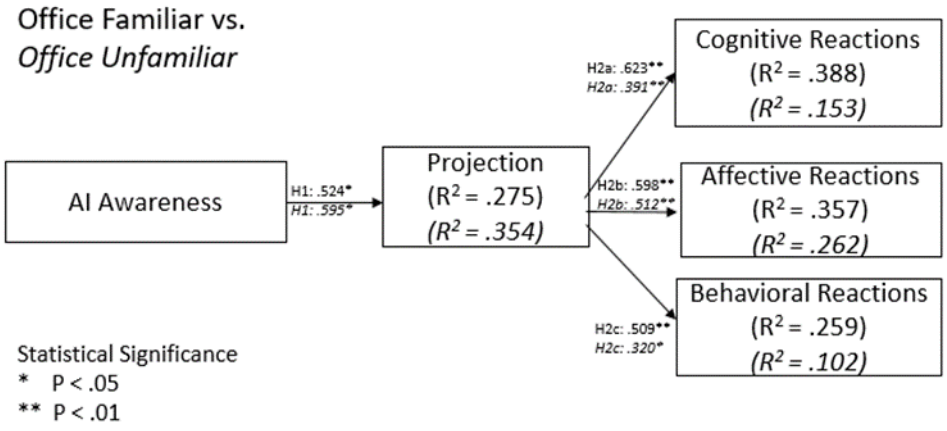

Figure 8 presents the comparison of the model results when participants are assigned to the office scenarios in Study 2. The Projection is higher in the unfamiliar office situation. This

indicates that people engage in more cognitive or affective evaluations regarding AI-powered smart technologies when they are in someone else's office. They have fewer concerns about the AI-powered smart technology uses in their client's office, or they feel more energized or enthusiastic about using those technologies in their client's office after the incident. It is clear that more variances in people's reactions are explained when they are in their own office. They think AI-powered smart technologies are wonderful; they feel those technologies are joyful; and they spend more time exploring those technologies after the incident when they are in their own office. They probably do not care as much about the incident in their client's office because they do not own or use those technologies.

Figure 9. AIA core models with familiar situations comparison from Study 2

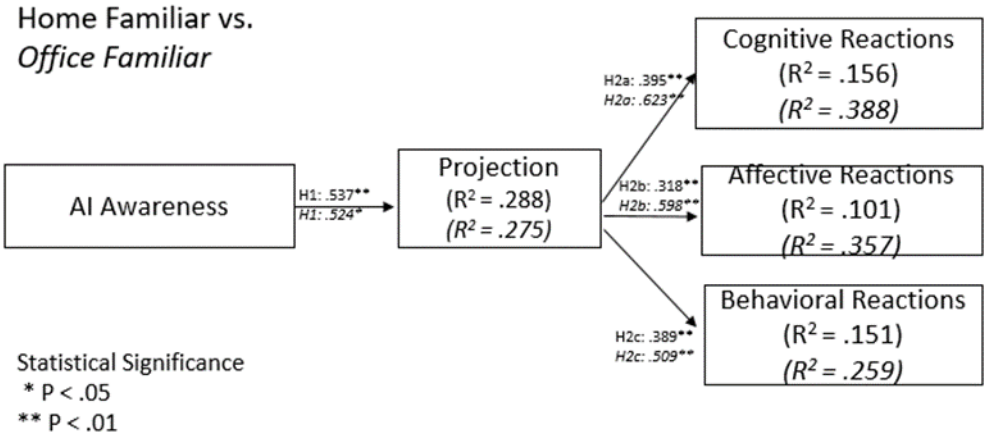

Figure 9 presents the comparison of the model results when people are in familiar situations, such as their home or their office. AIA is able to explain similar amounts of variation in Projection in both familiar situations (29% and 28%). However, when people are in their homes, they tend to have fewer reactions explained by the model, with R-squares for cognitive

reactions at 15%, for affective reactions at 10%, and for behavioral reactions at 15%. On the other hand, the R-squares for the three types of reactions in their office are 39%, 36%, and 26%. We believe that when people decide to adopt or use AI-powered smart technologies at home, they already have made some evaluations on their own. Since they have installed the technologies and have them at their home, they would use them despite the incident. Therefore, they tend to do less thinking or feel much more neutral about the incidents. These people probably fall into routinized uses without being explicitly aware of it.

Figure 10. AIA core models with unfamiliar situations comparison from Study 2

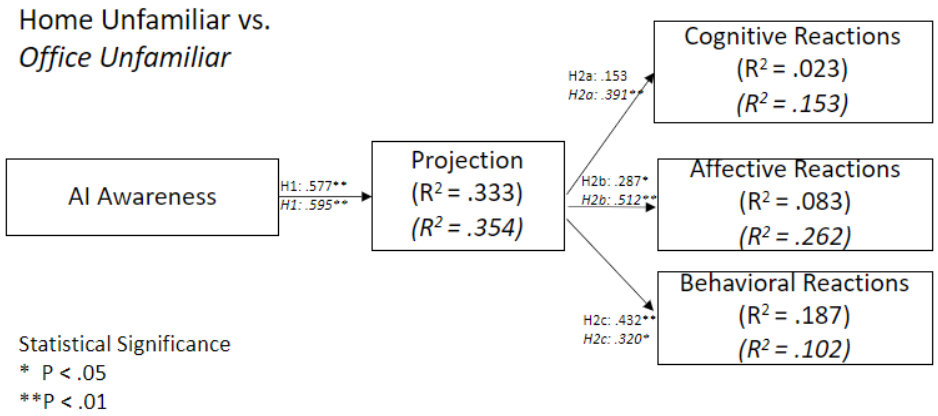

Figure 10 presents the comparison of the model results when people are in unfamiliar situations, such as at a friend's house or in their client's office. AIA can explain a similar amount of variance in Projection in both unfamiliar situations (33% and 35%). However, when people are at a friend's house, they tend to have significantly fewer reactions explained by the model, with R-squares for cognitive reactions at 2% and affective reactions at 8%. On the other hand, the R-squares for the first two types of reactions in their client's office are 15% and 26%.

Discussion

In this essay, we have developed a scale to capture AIA and tested the core of the AIA model in different situations. We have conducted a Pilot Study, Study 1 with only home scenarios, and Study 2 with all four treatments from home scenarios and office scenarios. Each study contributes uniquely to help us to understand the dimensions of AIA and its associations with other constructs. We used the Pilot Study to develop and purify the scale and check the realness of the scenarios. With the data from Study 1, we were able to further refine the scale and focus on the AIA core model in the home scenarios. Finally, we ran all four treatment situations, including two home scenarios and two office scenarios, in Study 2. We ran AIA as a reflective-formative construct in the Pilot Study and Study 1 and as a formative-formative construct in Study 2, which reveals the nature of the construct. All data supports that AIA is an aggregate second-order construct, with each dimension vigorously contributing to its formation.

Study 2 demonstrates that people's AIA does vary across different situations. One's AIA is significantly different when one's own house compared to when in the office. This confirms that awareness is a dynamic variable and changes with the situation (Sim et al. 2012). The data suggests that there is a positive correlation between one's AIA and projection. People are more likely to experience projection as their AIA increases. This is consistent with SA, as projection builds on people's perceptions and understanding of the elements in the environment (Endsley 1995). The results also indicate that projection is a full mediator between one's AIA and one's reactions towards AI-powered smart technologies.

We find that all the hypotheses are supported in almost all situations. The only exception is the insignificant relationship between AIA and projection in Study 1. There is still a positive relationship found between the two constructs, but the strength of the relationship is not

significant. We believe this may be a result of convenience sampling. The target population is people who have prior experience with AI-powered smart technologies. However, the sample from Study 1 is almost entirely students (99%). This group has higher homogeneity than we want in our intended target population. Hence, the homogeneity of the sample might cause the inconsistency in the relationships between AIA and projections compared to other studies.

Implications for Research

The studies offer both theoretical and empirical contributions. As for the theoretical contributions, the studies have confirmed the existence of AIA, which we have developed based on SA theory (Endsley 1995). The results support that people's AIA changes with situations, as SA indicates.

With the rapid technological changes and large scale of technology-imposed changes to organizations and society, researchers need new constructs to address these phenomena (Compeau, Correia and Thatcher 2022). It is beneficial to have a new construct to help us understand how people use or engage with AI-powered smart technologies. AIA allows researchers to reflect on how people perceive the presence, purpose, and practices of AI-powered smart technologies, affecting their actual technology uses or related decisions in different situations. The data contribute to a clearer understanding of awareness in the context of AI. Therefore, AIA provides us an alternative way to study AI usage.

We are able to extend SA beyond the work environment and apply it to a broader population. Typically, SA is used to improve employee performance and reduce human errors in organizational settings (Endsley 1995). In our studies, people use AI-powered smart technologies at different places. They might use AI-powered smart technologies to fulfill their

job requirements; they might use them for leisure. Therefore, we are able to show how AIA, a specialized form of SA, directs people's reactions to AI-powered smart technologies inside and outside work. In SA, people expect to perform very well, and they are either already experts or in the process of becoming experts. However, our intended target population can be anyone who uses AI-powered smart technologies. Hence, we believe the generalizability of the concept of AIA is broader.

We also find some interesting results regarding the different situations of AI-powered smart technology uses. First, there is no difference regarding people's perceptions of the presence of AI-powered smart technologies across all situations. In other words, people view the existence of the AI-powered smart technologies the same way no matter if they are at home or they are at work. There are two possible explanations for this. One is that as one's work life and personal life are increasingly overlapping (Porters 2014), the boundaries between personal domain and work domain become blurred. There is an increasingly cross-domain adaptation (Burleson et al. 2021). Another explanation is that the ubiquity of AI, cloud computing (August et al. 2014), and mobile devices (Goggin 2012) provides people the freedom to use technologies wherever they want (Burleson et al. 2021).

The second finding that captures our attention is that people tend to have the largest number of predicted reactions to the incident in their office. They are more likely to ignore the incident, they still feel positively toward the technology after the incident, they spend more time exploring AI-powered smart technologies, and they are less likely to unplug the technologies after the incident. This is reasonable, because most people do not have a choice in what AI-powered smart technologies are installed in their offices. Therefore, they do not have much choice but to continue using them after the incident.

Another interesting finding is that fewer variations in people's reactions are explained in unfamiliar scenarios such as in someone else's home or a client's office (see Figure 9). We notice that people have less control in both situations. Psychological ownership provides a good explanation for this finding. As people develop feelings of ownership towards an artifact, there are potentially strong psychological and behavioral effects associated with those feelings. People try to control the artifact, become intimate with it, and use it (Pierce et al. 2003). In the situations where individuals are in someone else's home or their client's office, they do not own the AI-powered smart technologies or do not have the right to control them. Hence, they have fewer thoughts, feelings, and behavioral reactions towards those technologies.

Lastly, we are able to demonstrate the reliability of the measures and the robustness of the model by testing them in three separate studies. In the Pilot Study, we recruited participants from MTurk. In Study 1, we used student samples from a southern university. In Study 2, we recruited participants from Prolific. Collecting the data of participants from a variety of sources, we are able to show that AIA exists among them, and the relationships in the AIA model are significant in almost all cases. Therefore, we are confident that the results of the studies can be applied to other populations as well.

Implications for Practice

This essay also offers some empirical contributions. Since organizations and companies invest a great deal in AI and AI-powered technologies, it is in their best interest that their employees make full use of those technologies. Many companies do not have the in-house skill sets or knowledge to leverage the capabilities of AI (Roe 2020).

In order to use these technologies to the fullest and avoid negative outcomes, employees need to know their functions and proper practices. There are possible negative outcomes associated with AI and its uses. For instance, AI and AI-powered smart technologies depend on the data collected to train the model and make predictions. Employees need to understand that AI only interprets the data that people feed it. In other words, the model can be only as good or as poor as the underlying data. AI cannot account for constant change or make adaptations (Roe 2020). Hence, employees cannot blindly rely on AI models. Companies should delineate appropriate and inappropriate practices with AI so that employees can watch out for algorithm bias. Helping employees understand the purposes and the proper practices of AI-powered smart technologies can improve their AIA and thereby avoid potential negative consequences from AI uses.

Because there is a significant difference between people's AIA at home and at work, it is very likely that people's AIA also changes with different settings in the office, such as closed office spaces and open public areas. Organizations need to take the situational factor into consideration when deciding where to install AI-powered smart technologies. They need to maximize the usages and the benefits of those technologies.

As AI-powered smart technologies become increasing important in organizations, some jobs require employees to work in an environment with many AI-powered smart technologies. The measures of AIA provide organizations an opportunity to put employees with higher-level AIA in AI-savvy environments. Moreover, organizations can use AIA and its measures to understand their employees and those employees' awareness regarding AI-powered smart technologies. They will thus have knowledge of their employees' perceptions and understandings of those technologies in different environments.

AIA also provides a possible solution for addressing the problem of decreased technology use over time. Evidence shows that the longer people own smart speakers, the less often they use them (Lopatovska et al. 2019). Therefore, it is beneficial to make occasional efforts to raise employees' AIA so that they stay alert to AI-powered smart technologies and continue using them actively. Organizations can increase their employees' AIA towards the target AI-powered smart technologies by either providing them some stimulus or creating the right environment. In this way, organizations can create more value and benefits by implementing meaningful interactions with those technologies.

Limitations

Like any research study, this one is not immune to limitations. The first limitation comes from the design of the studies. We used factorial survey design and asked participants their opinions regarding AI-powered smart technology uses in different situations. Instead of capturing people's actual thoughts, emotions, or behaviors, we only recorded people's reports of their reactions towards AI-powered smart technology uses. It would be ideal if we could set up experiments and record people's movements and reactions in a controlled environment, as an experimental design would help us to produce a verifiable conclusion about the relationship between input and output. However, there may be multiple factors that impact one's decisions in real life, and even experiments would not capture that (Taylor 2006). With the help of factorial survey design, we are able to use several real-life vignettes to gather people's possible reactions in four situations: familiar home, unfamiliar home, familiar office, and unfamiliar office. Despite the fact that we could not record participants' real thoughts, emotions, or behaviors in the study in a controlled environment, the use of factorial design adds validity and

robustness to our studies by allowing us to include real-life events in different situations in the studies (Taylor 2006).

The next limitation regards the list of people's reactions in the study. We decided on three types of reactions that are general and nonspecific. However, there are many other possible reactions that can be found and explained in combination with another theory or model. For instance, after people experience the incident of their virtual assistant suddenly responding to their phone conversation, they might consider talking less about themselves in front of virtual assistants because they want to protect their identity (Shoemaker 2010). We believe that researchers can use the general reactions as a starting point and add specific reactions based on what their chosen theories or models have suggested. Another possible way to expand the list of reactions is to allow participants to identify some reactions on their own, because they are the ones who actually use those AI-powered smart technologies and react to the incidents. We can then include more reactions in the next round of data collection.

The last limitation is the generalizability of the results of the study. Since we studied people's awareness in use contexts, we sampled a group of people who had prior experiences with AI-powered smart technology uses. Therefore, the conclusions we draw from our studies may not apply to populations with no experience with AI-powered smart technologies. However, we see this as a potential topic for our future studies on AIA. It would be interesting to investigate how people develop AIA or how their AIA changes as they adopt certain AI-powered smart technologies. There is a great deal of rapid growth in AI and related technologies. We are confident that we will have numerous opportunities to investigate AIA in different populations and apply the concept of AIA to a range of areas.

Future Directions

As for future studies, we need to first investigate the role of psychological ownership and its impacts on one's AIA. The results of the data show that one's AIA is significantly different in their own home compared to in the office scenarios. What is more, people's reactions towards AI-powered smart technologies are very different when they are in a familiar situation compared to an unfamiliar situation, such as a friend's house or a client's office. We believe that psychological ownership can provide us some insight into how owning that technology affects one's AIA.

Another interesting future direction is to examine how AIA affects people's reactions towards another individual using their AI-powered smart technologies. AI depends on data training. When one uses AI-powered smart technology, such as a smart TV, that technology relies on his or her watch lists or watching habits to generate a watch-later list or make recommendations. The information is intended to be accurate based on the data feed from that particular individual. It would be interesting to consider the relationship between one's AIA and their level of comfort with other people using their AI-powered smart technologies, knowing that this will ruin their perfectly trained algorithm.

The third possible future direction is to expand the investigation of use situations to more places, such as public libraries, train stations, or shops where people have used AI robots or AI-powered technologies to provide information, monitor traffic, or assist them. As we are now building smart cities, there will be an extensive usage of AI-powered smart technologies. How we perceive the existence of AI in public places and how we view the interactions we have with it there are possible topics that we can investigate with the help of AIA.

The last future direction we wish to mention here relates to the domains of technology uses. A recent study (Burleson et al. 2021) states that there is an increase in cross-domain adaptation. People are starting to use technologies in their personal domain at workplaces. As we ask participants to choose what AI-powered smart technologies they use at home or at work, we can see that people use smartphones, smart TVs, smart speakers, and wearable technologies most often at home, while people find smart thermostats, tracking devices, and voice control the most used at workplaces. It would be interesting to study how people's AIA impacts their cross-domain adaptation, such as for a technology first used at home then introduced to work, or vice versa. Does high-level AIA aid in this process, or does it impede the cross-adaptation? How does one's AIA change in this process? There are a number of questions that we can explore in this cross-adaptation context.

References

August, T., Niculescu, M. F., and Shin, H. 2014. "Cloud Implications on Software Network Structure and Security Risks," *Information Systems Research* (25:3), INFORMS (Institute for Operations Research and the Management Sciences), pp. 489–510. (https://doi.org/10.1287/isre.2014.0527).

Auxier, B. 2019. "5 Things to Know about Americans and Their Smart Speakers," November 21. (https://www.pewresearch.org/fact-tank/2019/11/21/5-things-to-know-about-americans-and-their-smart-speakers/, accessed December 12, 2021).

Bagozzi, R. P., Yi, Y., and Phillips, L. W. 1991. "Accessing Construct Validity in Organizational Research," *Administrative Science Quarterly*, pp. 421–458.

Burleson, J., Grover, V., Thatcher, J. B., and Sun, H. 2021. "A Representation Theory Perspective on the Repurposing of Personal Technologies for Work-Related Tasks," *Journal of the Association for Information Systems* (6), pp. 1556–1589. (https://doi.org/10.17705/1jais.00707).

Byrne, B. M. 2010. *Structural Equation Modeling with AMOS: Basic Concepts, Applications, and Programming*, New York: Routledge.

Carter, L., and Heikkila, M. 2021. "Your Boss Is Watching: How AI-Powered Surveillance Rules the Workplace," May 27. (https://www.politico.eu/article/ai-workplace-surveillance-facial-recognition-software-gdpr-privacy/, accessed December 12, 2021).

Carter, M., and Grover, V. 2015. "Me, My Self, and I(T): Conceptualizing Information Technology Identity and Its Implications," *MIS Quarterly* (39:4), pp. 931–957.

Carter, M., Petter, S., Grover, V., and Bennett Thatcher, J. 2020. "IT Identity: A Measure and Empirical Investigation of Its Utility to IS Research."

Cenfetelli, R. T., and Bassellier, G. 2009. "Interpretation of Formative Measurement in Information Systems Research," *MIS Quarterly* (33:4), p. 689. (https://doi.org/10.2307/20650323).

Churchill, G. A. 1979. "A Paradigm for Developing Better Measures of Marketing Constructs," *Journal of Marketing Research* (16:1), pp. 64–73. (https://doi.org/10.1177/002224377901600110).

Correia, J., and Compeau, D. 2017. "Information Privacy Awareness (IPA): A Review of the Use, Definition and Measurement of IPA," in *Proceedings of the 50th Hawaii International Conference on System Sciences*, pp. 4021–4030. (http://hdl.handle.net/10125/41646).

Diamantopoulos. 2011. "Incorporating Formative Measures into Covariance-Based Structural Equation Models," *MIS Quarterly*. (https://doi.org/10.2307/23044046).

Diamantopoulos, A., Riefler, P., and Roth, K. P. 2008. "Advancing Formative Measurement Models," *Journal of Business Research*, pp. 1203–1218. (https://doi.org/10.1016/j.jbusres.2008.01.009).

Dickson, B. 2022. “Where Is the Voice Assistant Industry Headed?,” January 10. (https://bdtechtalks.com/2022/01/10/voice-assistant-industry-forecast/, accessed February 12, 2022).

Dinev, T., and Hart, P. 2006. “An Extended Privacy Calculus Model for E-Commerce Transactions,” *Information Systems Research* (17:1), pp. 61–80. (https://doi.org/10.1287/isre.1060.0080).

Endsley, M. 1995. “Towards a Theory of Situation Awareness in Dynamic Systems,” *Human Factors* (37:1), pp. 32–64. (https://doi.org/10.1518/001872095779049543).

Endsley, M. R. 2000. “Situation Awareness Analysis and Measurement,” in *Situation Awareness Analysis and Measurement*, Mahwah, NJ: Lawrence Erlbaum Associates, pp. 1–23.

Fornell, C., and Larcker, D. 1981. “Evaluating Structural Equation Models with Unobservable Variables and Measurement Error,” *Journal of Marketing Research*, pp. 39–50.

Foroudi, P., Gupta, S., Sivarajah, U., and Broderick, A. 2018. “Investigating the Effects of Smart Technology on Customer Dynamics and Customer Experience,” *Computers in Human Behavior* (80), Elsevier Ltd, pp. 271–282. (https://doi.org/10.1016/j.chb.2017.11.014).

Gefen, D., and Straub, D. 2005. “A Practical Guide to Factorial Validity Using PLS-Graph: Tutorial and Annotated Example,” *Communications of the Association for Information Systems* (16), pp. 91–109. (https://doi.org/10.17705/1cais.01605).

Goernemann, E. M., and Spiekermann-Hoff, S. 2020. “Moments of Truth with Conversational Agents: An Exploratory Quest for the Relevant Experiences of Alexa Users,” in *Twenty-Eighth European Conference on Information Systems*, pp. 1–17.

Goggin, G. 2006. *Cell Phone Culture: Mobile Technology in Everyday Life*, Routledge.

Hair, J. F., Sarstedt, M., Matthews, L. M., and Ringle, C. M. 2016. “Identifying and Treating Unobserved Heterogeneity with FIMIX-PLS: Part I – Method,” *European Business Review* (28:1), pp. 63–76. (https://doi.org/10.1108/EBR-09-2015-0094).

Hair, J., Anderson, R. E., Tatham, R. L., and Black, W. C. 1998. *Multivariate Data Analysis*, (5th ed.), New Jersey: Prentice Hall.

Hair, J. F., Ortinau, D. J., and Harrison, D. E. 2010. *Essentials of Marketing Research*, (Vol. 2), New York: McGraw-Hill/Irwin.

Hair, J. F., Ringle, C. M., and Sarstedt, M. 2011. “PLS-SEM: Indeed a Silver Bullet,” *Journal of Marketing Theory and Practice* (19:2), pp. 139–151. (https://doi.org/10.2753/MTP).

Harish, A., Naveensankar, K. S., Abdullah, M., and Devi, K. K. 2016. “VFF-A Framework for Linking Virtual Assistants with IoT,” *An International Journal of Advanced Computer Technology* (1), pp. 58–61.

Heikkila, M. 2021. “The Rise of AI Surveillance,” May 26. (https://www.politico.eu/article/the-rise-of-ai-surveillance-coronavirus-data-collection-tracking-facial-recognition-

monitoring/, accessed December 12, 2021).

Horowitz, J. H. 2020. "Impact of Artificial Intelligence in Everyday Life," November 12. (https://itchronicles.com/artificial-intelligence/how-do-we-use-ai-in-everyday-life/, accessed February 12, 2022).

Kinsella, B. 2019. "Voice Assistant Demographic Data—Young Consumers More Likely to Own Smart Speakers While Over 60 Bias Toward Alexa and Siri." (https://voicebot.ai/2019/06/21/voice-assistant-demographic-data-young-consumers-more-likely-to-own-smart-speakers-while-over-60-bias-toward-alexa-and-siri/, accessed December 12, 2021).

Lopatovska, I., Rink, K., Knight, I., Raines, K., Cosenza, K., Williams, H., Sorsche, P., Hirsch, D., Li, Q., and Martinez, A. 2019. "Talk to Me: Exploring User Interactions with the Amazon Alexa," *Journal of Librarianship and Information Science* (51:4), pp. 984–997. (https://doi.org/10.1177/0961000618759414).

MacKenzie, Podsakoff, and Podsakoff. 2011. "Construct Measurement and Validation Procedures in MIS and Behavioral Research: Integrating New and Existing Techniques," *MIS Quarterly* (35:2), pp. 293–334. (https://doi.org/10.2307/23044045).

Mark, R. 1996. *Research Made Simple: A Handbook for Social Workers*, SAGE.

Marr, B. 2020. "The Top 10 Artificial Intelligence Trends Everyone Should Be Watching in 2020," January 6. (https://www.forbes.com/sites/bernardmarr/2020/01/06/the-top-10-artificial-intelligence-trends-everyone-should-be-watching-in-2020/?sh=2e8ac3fc390b), accessed December 10, 2021).

Merenda, P. F. 1997. "A Guide to the Proper Use of Factor Analysis in the Conduct and Reporting of Research: Pitfalls to Avoid," *Measurement and Evaluation in Counseling and Development* (30:3), American Counseling Association, pp. 156–164. (https://doi.org/10.1080/07481756.1997.12068936).

Mihajlovic, I. 2019. "How Artificial Intelligence Is Impacting Our Everyday Lives," June 13. (https://towardsdatascience.com/how-artificial-intelligence-is-impacting-our-everyday-lives-eae3b63379e1, accessed February 12, 2022).

Nirale, S. 2018. "What Makes Emerging Technologies the Future of Customer Experience?," July 25. (https://servion.com/blog/what-emerging-technologies-future-customer-experience/, accessed December 1, 2021).

Pais, S., Casal, J., Ponciano, R., and Lourenco, S. 2015. "Unsupervised Assistive and Adaptive Intelligent Agent in Smart Environment," in *Intelligent Environments and System Conferences ICIES*, Paris.

Palan, S., and Schitter, C. 2018. "Prolific.Ac—A Subject Pool for Online Experiments," *Journal of Behavioral and Experimental Finance* (17), Elsevier B.V., pp. 22–27. (https://doi.org/10.1016/j.jbef.2017.12.004).

Palmer, A. 2021. "Amazon Uses an App Called Mentor to Track and Discipline Delivery Drivers,"

February 12. (https://www.cnbc.com/2021/02/12/amazon-mentor-app-tracks-and-disciplines-delivery-drivers.html, accessed December 12, 2021).

Peer, E., Brandimarte, L., Samat, S., and Acquisti, A. 2017. "Beyond the Turk: Alternative Platforms for Crowdsourcing Behavioral Research," *Journal of Experimental Social Psychology* (70), Academic Press Inc., pp. 153–163. (https://doi.org/10.1016/j.jesp.2017.01.006).

Peterson, R. A. 2000. "A Meta-Analysis of Variance Accounted for and Factor Loadings in Exploratory Factor Analysis," *Marketing Letters* (Vol. 11), Kluwer Academic Publishers.

Petter, Straub, and Rai. 2007. "Specifying Formative Constructs in Information Systems Research," *MIS Quarterly*. (https://doi.org/10.2307/25148814).

Pierce, J. L., Kostova, T., and Dirks, K. T. 2003. "The State of Psychological Ownership: Integrating and Extending a Century of Research," *Review of General Psychology* (7:1), pp. 84–107. (https://doi.org/10.1037/1089-2680.7.1.84).

Podsakoff, P. M., MacKenzie, S. B., Lee, J. Y., and Podsakoff, N. P. 2003. "Common Method Biases in Behavioral Research: A Critical Review of the Literature and Recommended Remedies," *Journal of Applied Psychology*, pp. 879–903. (https://doi.org/10.1037/0021-9010.88.5.879).

Polites, G. L., Roberts, N., and Thatcher, J. 2012. "Conceptualizing Models Using Multidimensional Constructs: A Review and Guidelines for Their Use," *European Journal of Information Systems*, pp. 22–48. (https://doi.org/10.1057/ejis.2011.10).

Porter, A. D. L. 2014. "Manage Your Work, Manage Your Life," *Harvard Business Review*.

Ringle, C., Dirceu Da Silva, and Diogenes Bido. 2015. "Structural Equation Modeling with the SmartPLS," *Brazilian Journal of Marketing* (13:2).

Rodríguez-Entrena, M., Schuberth, F., and Gelhard, C. 2018. "Assessing Statistical Differences between Parameters Estimates in Partial Least Squares Path Modeling," *Quality and Quantity* (52:1), Springer Netherlands, pp. 57–69. (https://doi.org/10.1007/s11135-016-0400-8).

Roe, D. 2020. "A Look at the Downsides of Artificial Intelligence," April 30. (https://www.reworked.co/information-management/a-look-at-the-downsides-of-artificial-intelligence/, accessed December 12, 2021).

Sarstedt, M., Hair, J. F., Cheah, J. H., Becker, J. M., and Ringle, C. M. 2019. "How to Specify, Estimate, and Validate Higher-Order Constructs in PLS-SEM," *Australasian Marketing Journal* (27:3), pp. 197–211. (https://doi.org/10.1016/j.ausmj.2019.05.003).

Sarstedt, M., Ringle, C. M., and Hair, J. F. 2014. "PLS-SEM: Looking Back and Moving Forward," *Long Range Planning*, pp. 132–137. (https://doi.org/10.1016/j.lrp.2014.02.008).

Shoemaker, D. W. 2010. "Self-Exposure and Exposure of the Self: Informational Privacy and the

Presentation of Identity," *Ethics and Information Technology* (12:1), pp. 3–15. (https://doi.org/10.1007/s10676-009-9186-x).

Sim, I., Liginlal, D., and Khansa, L. 2012. "Information Privacy Situation Awareness: Construct and Validation," *Journal of Computer Information Systems* (53:1), pp. 57–64. (https://doi.org/10.1080/08874417.2012.11645597).

Stamford, C. 2019. "Gartner Survey Shows 37 Percent of Organizations Have Implemented AI in Some Form," January 21. (https://www.gartner.com/en/newsroom/press-releases/2019-01-21-gartner-survey-shows-37-percent-of-organizations-have, accessed January 12, 2022).

Statista Research Department. 2020. "Forecast Growth of the Artificial Intelligence (AI) Software Market Worldwide from 2019 to 2025," *Artificial Intelligence Software Market Growth Forecast Worldwide 2019-2025*, August 17. (https://www.statista.com/statistics/607960/worldwide-artificial-intelligence-market-growth/, accessed October 12, 2021).

Statista Research Department. 2022. "The Revenues from Artificial Intelligence (AI) Software Market Worldwide from 2018 to 2025," *Artificial Intelligence (AI) Software Market Revenue Worldwide from 2018 to 2025*, January 18.

Syam, N., and Sharma, A. 2018. "Waiting for a Sales Renaissance in the Fourth Industrial Revolution: Machine Learning and Artificial Intelligence in Sales Research and Practice," *Industrial Marketing Management* (69), Elsevier Inc., pp. 135–146. (https://doi.org/10.1016/j.indmarman.2017.12.019).

Tabachnick, B. G., Fidell, L. S., and Ullman, J. B. 2007. *Using Multivariate Statistics*, (7th ed.), New York: Pearson.

Taylor, B. J. 2006. "Factorial Surveys: Using Vignettes to Study Professional Judgement," *British Journal of Social Work* (36), pp. 1187–1207. (https://doi.org/10.1093/bjsw/bch345).

Urbach, N., and Ahlemann, F. 2010. "Structural Equation Modeling in Information Systems Research Using Partial Least Squares Structural Equation Modeling in Information Systems Research Using Partial Least Squares Structural Equation Modeling in Information Systems Research Using Partial Least Squares," (Vol. 11). (https://www.researchgate.net/publication/228467554).

APPENDIX A

Table A1: Comparisons between SA and AIA

	Situation Awareness	AI Awareness
Definition	Refers to the perception of the elements in the environment within a volume of time and space, the comprehension of their meaning, and the projection of their status in the near future	Is the extent to which a person perceives the presence, the purposes, and the practices of AI-powered smart technology in given contexts.
Purpose	Focuses on building awareness and on how awareness influences people's reading of the stimuli from the environment.	Studies how people's awareness of AI-powered smart technology changes or is maintained in a situation.
	Is useful for enhancing a person's ability to pay attention to essential information cues in the environment.	Sheds light on why people have different levels of awareness of the presence of AI-powered smart technology in different given contexts.
	Is mainly for organizational use.	Focuses on the personal use of technology.
Component	There are three hierarchical levels of domain knowledge:	There are three dimensions of knowledge (non-hierarchical):
	Level 1 consists of perceiving the relevant elements of the environment.	Dimension 1 is one's basic perceptions of AI-powered smart technology in a situation.
	Level 2 consists of interpreting and combining the information from Level 1 with existing knowledge so that people can gain a	Dimension 2 is the purposes of AI-powered smart technology in a situation.

	coherent and comprehensive view of the situation.	
	Level 3 is one's projection of what the environment will look like based on the information from the previous two levels.	Dimension 3 involves the practices of AI-powered smart technology in a situation.
Target Population	People who need to operate a complicated system of machinery, deal with a lot of information, and make decisions in a stable environment. They are normally domain experts.	People who own or operate AI-powered smart technology.
Outcome	People are expected to make the right decisions and generate good performances in those domains.	When people have little AIA, they are less likely to evaluate or detect risks involved in the use of AI-powered smart technology in a situation. They are more likely to evaluate or detect risks involved in the use of AI-powered smart technology as their AIA increases.

Table A2: Concepts Related to AIA

Similar Concept	Definition	Antecedent	Reference
Tech Savviness	Knowing a great deal about modern technology, especially computers.		Cambridge Dictionary 2020
IT Mindfulness	An overarching mental mindset driven by individual awareness of the context of and openness to the value-adding applications of IT.	Alertness to distinction Awareness of multiple perspectives Openness to novelty Orientation in the present	Thatcher et al. 2018

IS Habits	The extent to which people tend to perform behaviors using IS automatically because of learning. It has little to do with intentions.	Satisfaction Comprehensiveness of usage Frequency of prior behavior	Limayem et al. 2007 Ouellette and Wood 1998
Cognitive Absorption	A state of deep involvement with software to gain a deeper understanding of the formation of user beliefs and usage intention.	Curiosity Control Temporal dissociation Focused immersion Heightened enjoyment	Agarwal and Karahana 2000

APPENDIX B

Table B1. Participant characteristics for Pilot Study

Demographics		Frequency	Percentage
Age			
	25–34	24	42.1
	35–44	17	29.8
	45–54	9	15.8
	55–64	5	8.8
	65–74	2	3.5
Gender			
	Female	28	49.1
	Male	29	50.9
Education			
	High school	6	10.5
	Associate degree	6	10.5
	Some college	12	21.1
	College	28	49.1
	Master's	4	7.0
	Doctoral	1	1.8
Income			
	Less than $10,000	5	8.8
	$10,000–$19,999	3	5.3
	$20,000–$29,999	8	14.0
	$30,000–$39,999	7	12.3
	$40,000–$49,999	5	8.8
	$50,000–$59,999	8	14.0
	$60,000–$69,999	4	7.0
	$70,000–$79,999	2	3.5
	$80,000–$89,999	3	5.3
	$90,000–$99,999	8	14.0
	$100,000–$149,999	3	5.3
	Prefer not to answer	1	1.8
Length of AI-powered smart technology uses			
	Less than one year	2	3.5
	One to three years	12	21.1
	Three to five years	17	29.8
	More than five years	26	45.6
Game score			
	Below five	12	21.1
	Between five and ten	33	57.9
	Above ten	12	21.1

Table B2. Factor Loadings in Pilot Study

	presence	purpose	practice	Cognitive evaluation	Affective evaluation	CR	AR	BR
pre1	0.873	0.544	0.605	0.228	0.282	0.348	0.310	0.234
pre2	0.894	0.416	0.660	-0.021	0.229	0.200	0.098	0.136
pre3	0.906	0.495	0.658	0.038	0.345	0.24	0.197	0.047
pre4	0.776	0.569	0.663	0.147	0.146	0.177	0.183	0.100
pre5	0.814	0.447	0.512	-0.173	0.177	0.074	0.061	-0.133
pre6	0.796	0.515	0.503	-0.170	0.126	0.075	0.057	-0.103
pur1	0.484	0.166	0.312	-0.210	0.044	-0.056	-0.107	0.023
pur2	0.092	0.481	0.235	0.045	-0.027	-0.070	-0.061	-0.090
pur3	0.528	0.644	0.530	-0.095	0.115	0.003	-0.047	0.039
pur4	0.611	0.64	0.552	-0.147	0.230	0.083	-0.042	0.095
pur5	0.469	0.930	0.566	0.255	0.289	0.212	0.254	0.074
pur6	0.53	0.777	0.546	0.073	0.175	0.211	0.278	0.215
pra1	0.642	0.655	0.882	0.378	0.267	0.256	0.231	0.285
pra2	0.438	0.411	0.811	0.168	0.309	0.375	0.345	0.450
pra3	0.716	0.520	0.88	0.154	0.197	0.170	0.101	0.262
pra4	0.674	0.600	0.839	0.223	0.308	0.309	0.337	0.262
Cc1	0.052	0.207	0.290	0.959	0.350	0.510	0.592	0.452
Cc2	0.084	0.130	0.263	0.890	0.302	0.406	0.518	0.483
Cc3	0.055	0.130	0.234	0.954	0.257	0.429	0.527	0.386
Cc4	0.047	0.160	0.299	0.964	0.312	0.431	0.536	0.450

it1	0.291	0.256	0.254	0.330	0.910	0.591	0.565	0.376
it2	0.225	0.252	0.207	0.336	0.913	0.621	0.571	0.36
it3	0.253	0.316	0.325	0.261	0.866	0.729	0.696	0.480
it4	0.209	0.382	0.372	0.352	0.858	0.687	0.635	0.454
it5	0.293	0.084	0.224	0.216	0.817	0.551	0.494	0.426
it6	0.255	0.175	0.279	0.193	0.862	0.549	0.456	0.474
CR1	0.198	0.234	0.202	0.506	0.666	0.864	0.830	0.465
CR2	0.183	0.106	0.307	0.317	0.605	0.872	0.710	0.646
CR3	0.292	0.193	0.351	0.149	0.234	0.419	0.265	0.255
AR1	0.132	0.160	0.198	0.542	0.603	0.826	0.922	0.459
AR2	0.251	0.293	0.365	0.503	0.615	0.775	0.911	0.487
AR3	-0.124	0.012	-0.067	-0.203	0.094	0.109	0.072	0.170
BR1	0.080	0.159	0.326	0.524	0.469	0.583	0.512	0.895
BR2	0.039	0.009	0.234	0.257	0.392	0.495	0.404	0.773
BR3	-0.123	-0.09	0.005	0.026	0.204	0.340	0.221	0.335
BR4	0.310	0.250	0.386	0.192	0.025	0.049	-0.019	0.352
BR5	0.180	0.168	0.210	0.077	0.033	-0.017	-0.141	0.267

Table B3. Construct Reliability Analysis (Cronbach's Alpha and Composite Reliability)

	Cronbach's Alpha	Composite Reliability
Presence	0.924	0.937
Purpose	0.819	0.861
Practice	0.877	0.915
Cognitive evaluations	0.958	0.969
Affective evaluations	0.937	0.949

CR	0.716	0.875
AR	0.811	0.914
BR	0.628	0.710

Table B4. Construct Convergent Validity (AVE)

	Average Variance Extracted (AVE)
Presence	0.714
Purpose	0.609
Practice	0.729
Cognitive evaluations	0.888
Affective evaluations	0.760
CR	0.778
AR	0.841
BR	0.416

Table B5. Discriminant Validity—Fornell and Larcker Criterion

	presence	purpose	practice	Cognitive evaluation	Affective evaluation	CR	AR	BR
presence	**0.845**							
purpose	0.631	**0.781**						
practice	0.720	0.678	**0.854**					
Cognitive evaluation	0.063	0.123	0.290	**0.942**				

Affective evalua-tion	0.290	0.286	0.323	0.326	**0.872**			
CR	0.216	0.173	0.283	0.475	0.722	**0.882**		
AR	0.208	0.214	0.306	0.570	0.664	0.878	**0.917**	
BR	0.127	0.153	0.385	0.487	0.481	0.598	0.499	**0.645**

Table B6. Results for SEM Models for Pilot Study

	Original Sample	Sample Mean	Standard Deviation	T Statistics	P Values
AIA -> Projection	0.386	0.432	0.138	2.807	0.003
Projection -> Cognitive Reaction	0.736	0.747	0.067	10.976	0.000
Projection -> Affective reactions	0.723	0.732	0.070	10.303	0.000
Projection -> Behavioral reaction	0.587	0.586	0.111	5.306	0.000

With control variables: age, gender, income, and education.

Table B7. A complete list of items for the constructs in Pilot Study

Construct	Dimension	Item code	Item wording
AIA (aggregate second order)	Presence		When I am home (at my friend's home, in my office, in my client's office),
		Pre1	I know there are AI-powered smart technologies even though I do not see them.
		Pre2	I know that AI-powered smart technologies (e.g., virtual assistants) are listening to me.
		Pre3	I am conscious that AI-powered smart technologies (e.g., smart devices with sensors) are monitoring me.
		Pre4	I am immediately aware of the existence of AI-powered smart technologies.
		Pre5	I know that I am surrounded by AI-powered smart technologies.
		Pre6	I can detect AI-powered smart technologies.

	Purpose	Pur1	I know that AI-powered smart technologies are collecting my data.
		Pur2	I share only enough information to use AI-powered smart technologies in the ways I want to.
		Pur3	I am aware of the predictive features of AI-powered smart technologies.
		Pur4	I know the conversational features of AI-powered smart technologies.
		Pur5	I know the recommending features of AI-powered smart technologies.
		Pur6	I know how to prevent AI-powered smart technologies from collecting data if I want to.
	Practice	Pra1	I use several AI-powered smart technologies.
		Prac2	I use AI-powered smart technologies to manage different things, such as creating predictive shopping lists, controlling room temperature through thermostat, using smart vacuum.
		Prac3	I interact with different types of AI-powered smart technologies.
		Prac4	I use AI-powered smart technologies without thinking too much about them.
Projection (aggregate second order)	Cognitive evaluation	Cc1*	*I am concerned that the information I provide to virtual assistants could be misused.*
		Cc2*	*I am concerned that a person can find my private information via my virtual assistant.*
		Cc3*	*I am concerned about providing information to virtual assistants, because of what the companies or others might do with it.*
		Cc4*	*I am concerned about providing information to virtual assistants, because it could be used in a way I cannot foresee.*
	Affective evaluation		Thinking about myself in relation to virtual assistants,
		It1	I am dependent on them.
		It2	I am reliant on using them.
		It3	I am energized by using them.
		It4	I am enthusiastic about using them.
		It5	I am linked with them.
		It6	I am connected with them.

Cognitive reactions (reflective construct)		Previously, we said that virtual assistants are listening to you non-stop. Imagine that you notice it turning on the music when you are talking on the phone nearby. Please indicate the extent to which you agree with the following statements.
	Cr1	Virtual assistants are so wonderful that I do not care about the incident that just happened.
	Cr2	Virtual assistants are helpful despite the incident that just happened.
	Cr3	Virtual assistants need a lot of improvements, before these types of incidents will happen again.
Affective reactions (reflective construct)		We have described how virtual assistants are listening to you non-stop. Imagine you hear that your virtual assistant starts talking when you are on the phone with your friends (triggered accidentally by hearing the keywords). Please indicate the extent to which you agree with the following statements.
	Ar1	Using virtual assistants is such a joyful experience that I do not care about the incident that just happened.
	Ar2	Using virtual assistants is enjoyable despite the incident that just happened.
	Ar3	Using virtual assistants is generally pleasant, but the incident is annoying.
Behavioral reactions (reflective construct)		We have explained that virtual assistants are listening to you non-stop. Imagine that when you are watching TV, your virtual assistant starts reacting to phrases from your TV. Please indicate the extent to which you agree with the following statements.
	Br1	I spend more time exploring different functions of virtual assistants despite the incident.
	Br2	I ignore the incident and continue using virtual assistants as before.
	Br3	I continue using virtual assistants, but limit them to the basic functions.
	Br4*	*I unplug virtual assistants and only plug them in when needed.*
	Br5*	*I unplug virtual assistants and stop using them.*

* Indicates reverse coding item.

Table B8. Pre-test results for Pilot Study

	N	Minimum	Maximum	Mean	Std. Deviation	Skewness		Kurtosis	
	Statistic	Statistic	Statistic	Statistic	Statistic	Statistic	Std. Error	Statistic	Std. Error
pre1	57	1	5	3.58	.981	-.699	.316	-.232	.623
pre2	57	1	5	3.54	1.166	-.495	.316	-.618	.623
pre3	57	1	5	3.40	1.223	-.406	.316	-.692	.623
pre4	57	1	5	3.53	1.071	-.568	.316	-.079	.623
pre5	57	1	5	3.35	1.203	-.274	.316	-.854	.623
pre6	57	1	5	3.30	1.195	-.217	.316	-.887	.623
pur1	57	1	5	3.72	1.206	-.886	.316	-.121	.623
pur2	57	1	5	3.70	.944	-.809	.316	.333	.623
pur3	57	1	5	3.95	.990	-1.038	.316	.701	.623
pur4	57	1	5	3.93	.904	-1.063	.316	1.388	.623
pur5	57	1	5	3.44	1.282	-.359	.316	-.913	.623
pur6	57	1	5	3.89	.880	-.930	.316	1.296	.623
pra1	57	1	5	3.28	1.048	-.113	.316	-1.051	.623
pra2	57	1	5	3.23	1.239	-.044	.316	-1.095	.623
pra4	57	1	5	3.42	.999	-.276	.316	-.658	.623
pra6	57	1	5	3.42	1.051	-.166	.316	-.858	.623
Cc1	57	1	5	2.63	1.263	.299	.316	-1.109	.623
Cc2	57	1	5	2.70	1.388	.229	.316	-1.250	.623
Cc3	57	1	5	2.63	1.345	.211	.316	-1.378	.623
Cc4	57	1	5	2.58	1.253	.238	.316	-1.156	.623
IT1	57	1	5	2.86	1.407	-.061	.316	-1.475	.623
IT2	57	1	5	2.88	1.452	.040	.316	-1.437	.623
IT3	57	1	5	2.82	1.338	.101	.316	-1.179	.623
IT4	57	1	5	3.28	1.333	-.305	.316	-1.100	.623
IT5	57	1	5	3.19	1.329	-.415	.316	-1.105	.623
IT6	57	1	5	3.32	1.311	-.468	.316	-1.018	.623
CR1	57	1	5	2.49	1.241	.369	.316	-1.015	.623
CR2	57	1	5	3.40	1.050	-.791	.316	.056	.623
CR3	57	1	5	3.54	1.001	-.623	.316	.508	.623
AR1	57	1	5	2.35	1.246	.784	.316	-.516	.623
AR2	57	1	5	2.79	1.264	.028	.316	-1.216	.623
AR3	57	1	5	3.82	1.182	-1.261	.316	.849	.623
BR1	57	1	5	3.14	1.187	-.480	.316	-.653	.623
BR2	56	1	5	2.61	1.275	.298	.319	-1.102	.628
BR3	56	1	5	3.23	1.160	-.547	.319	-.628	.628
BR4	57	1	5	2.82	1.283	.130	.316	-1.121	.623
BR5	57	1	5	3.54	1.324	-.433	.316	-1.110	.623

Table B9. Nonresponse bias test

	N	Mean	Std. Deviation	Std. Error Mean	t	Sig. (2-tailed)

Pair 1	pree1 - prel1	15	-.46667	1.64172	.42389	-1.101	.290
Pair 2	pree2 - prel2	15	-.53333	2.13363	.55090	-.968	.349
Pair 3	pree3 - prel3	15	-.86667	1.68466	.43498	-1.992	.066
Pair 4	pree4 - prel4	15	.26667	1.94447	.50206	.531	.604
Pair 5	pree5 - prel5	15	-.66667	1.63299	.42164	-1.581	.136
Pair 6	pree6 - prel6	15	-.46667	2.06559	.53333	-.875	.396
Pair 7	pure1 - purl1	15	-.13333	1.68466	.43498	-.307	.764
Pair 8	pure2 - purl2	15	-.40000	1.12122	.28950	-1.382	.189
Pair 9	pure3 - purl3	15	-.46667	1.35576	.35006	-1.333	.204
Pair 10	pure4 - purl4	15	.00000	1.36277	.35187	.000	1.000
Pair 11	pure5 - purl5	15	-.20000	2.04241	.52735	-.379	.710
Pair 12	pure6 - purl6	15	-.26667	1.53375	.39601	-.673	.512
Pair 13	prace1 - pracl1	15	-.66667	1.63299	.42164	-1.581	.136
Pair 14	prace2 - pracl2	15	-.93333	2.31352	.59735	-1.562	.140
Pair 15	prace3 - pracl3	15	-.40000	1.59463	.41173	-.972	.348
Pair 16	prace4 - pracl4	15	-.46667	1.99523	.51517	-.906	.380

Table B10. Filter questions and control variables

Instruction/ Question	**Construct or variable**	**Type**	**Item**
We will start the survey by asking you to play a game to identify the possible AI-powered items in the room. We strongly suggest you use a computer for this part. You can start the game by clicking on the green flag. Click ONLY the question marks for items that you believe would use artificial intelligence (AI). Do not click question marks for	GameScore	Priming	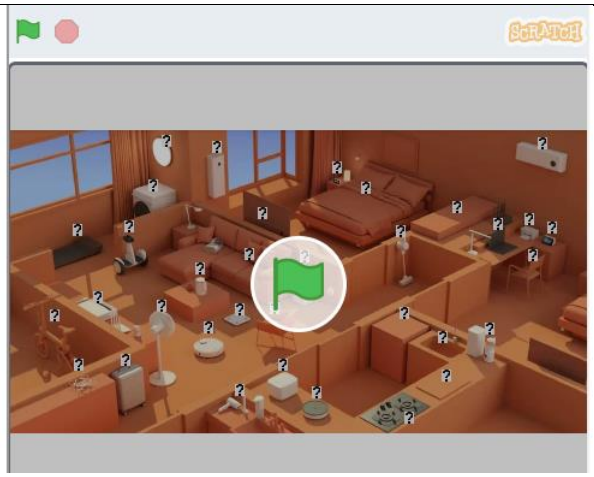

items that you feel would NOT use AI.			
Please read the consent form before you decide to participate in the study.	Consent	Filter question	Consent form Yes No*
In the home scenarios: We want to know your previous experience with AI-powered smart technologies. From the items below, please choose any that you have ever used (you can choose more than one). Here, "smart" indicates that the item is programmed to be capable of some independent actions.	Multiple choice	Filter question	Smart hub Smart speaker Smart TV Smart car Robot vacuum cleaner Smart thermostat Smart doorbell Smart camera Smart phone Wearable technologies I do not use any AI-powered smart technologies*
In the office scenarios: We want to know your previous experience with AI-powered smart technologies. Does your office have smart technologies that … (you can choose more than one). Here, "smart" indicates that the item is programmed	Multiple choice	Filter question	Have a location tracking feature Automatically control or regulate the temperature Allow voice control Turn the lights on or off automatically Have facial recognition features Assist in office automation Others, please specify: None*

to be capable of some independent actions.			
When did you begin to use AI-powered smart technologies on a regular basis?	Length of use	Control	Less than a year ago One to three years ago Three to five years ago More than five years ago I cannot recall
What is your age?	Age	Control	18–24 25–34 35-44 45–54 55–64 65–74 75–84 85 or older
What is the highest level of school you have completed or the highest degree you have received?	Education	Control	Less than high school degree High school graduate (or equivalent, including GED) Some college but no degree Associate's degree (2-year) Bachelor's degree (4-year) Master's degree Doctoral degree Professional degree (JD, MD)
What is your gender?	Gender	Control	Female Male

			Prefer not to say Prefer to self-describe
Please indicate the answer that includes your entire household income in (previous year) before taxes.	Income	Control	Less than $10,000 $10,000–$19,999 $20,000–$29,999 $30,000–$39,999 $40,000–$49,999 $50,000–$59,999 $60,000–$69,999 $70,000–$79,999 $80,000–$89,999 $90,000–$99,999 $100,000–$149,999 More than $149,999 Prefer not to answer
Do you have children living with you? **	Children	Control	No One More than one
Generally speaking, do you usually think of yourself as a Republican, a Democrat, and Independent, or something else? **	Political	Control	Republican Democrat Independent Something else

* If this option is chosen, the participant will be directed to the end of the survey.

**Not included in the Pilot Study

APPENDIX C

Table C1. Participant characteristics for Study 1

Demographics		Frequency	Percentage
Age			
	18–24	527	99.2
	25–34	4	0.8
Gender			
	Female	247	46.5
	Male	281	52.9
	Prefer not to answer	3	0.6
Education			
	Associate degree	124	23.4
	Some college	356	67.0
	College	39	7.3
	Master's	11	2.1
	Doctoral	1	0.2
Income			
	Less than $10,000	224	42.2
	$10,000–$19,999	118	22.2
	$20,000–$29,999	21	4.0
	$30,000–$39,999	3	0.6
	$40,000–$49,999	2	0.4
	$50,000–$59,999	1	0.2
	$60,000–$69,999	7	1.3
	$70,000–$79,999	5	0.9
	$80,000–$89,999	3	0.6
	$90,000–$99,999	6	1.1
	$100,000–$149,999	7	1.3
	More than $149,999	50	9.4
	Prefer not to answer	84	15.8
Length of AI-powered smart technology uses			
	Less than one year	10	1.9
	One to three years	49	9.2
	Three to five years	131	24.7
	More than five years	312	58.8
	Cannot recall	29	5.5
Game score			
	Below five	46	8.7
	Between five and ten	236	44.4
	Above ten	249	46.9
Political affiliation			
	Democrat	50	9.4

	Republican	363	68.4
	Independent	80	15.1
Children			
	No	528	99.4
	One	1	0.2
	More than one	2	0.4

Table C2. Factor loadings table for Study 1

	Pres-ence	Purpose	Practice	Cognitive evaluation	Affective evaluation	CR	AR	BR
pre1	0.706	0.341	0.370	-0.166	0.176	0.053	0.009	0.064
pre2	0.756	0.355	0.274	-0.194	0.035	-0.099	-0.064	-0.070
pre3	0.768	0.336	0.260	-0.213	0.037	-0.075	-0.052	-0.149
pre4	0.732	0.367	0.308	-0.185	0.128	0.035	-0.008	-0.076
pre5	0.746	0.451	0.347	-0.177	0.093	-0.033	-0.060	-0.039
pur1	0.373	0.780	0.228	-0.053	0.147	0.092	0.091	-0.058
pur2	0.403	0.828	0.275	-0.120	0.096	-0.011	0.031	0.056
pur3	0.427	0.802	0.291	-0.084	0.114	-0.001	0.099	-0.011
pra1	0.411	0.317	0.816	-0.118	0.281	0.075	0.110	0.086
pra2	0.287	0.204	0.804	-0.107	0.342	0.182	0.189	0.016
pra3	0.376	0.252	0.877	-0.116	0.306	0.095	0.135	0.139
pra4	0.335	0.331	0.811	-0.073	0.282	0.112	0.106	0.054
cc1	-0.22	-0.122	-0.128	0.825	-0.072	0.124	0.097	0.198
cc2	-0.24	-0.098	-0.158	0.850	-0.046	0.152	0.124	0.226
cc3	-0.218	-0.091	-0.081	0.894	0.009	0.164	0.192	0.232
cc4	-0.192	-0.059	-0.07	0.892	0.004	0.179	0.169	0.166
it1	0.113	0.122	0.349	-0.062	0.837	0.405	0.364	0.115
it2	0.084	0.120	0.350	-0.050	0.862	0.404	0.383	0.137

it3	0.143	0.137	0.259	-0.006	0.801	0.445	0.446	0.115
it4	0.125	0.111	0.254	0.029	0.756	0.384	0.388	0.172
it5	0.095	0.11	0.308	-0.012	0.849	0.402	0.393	0.121
it6	0.100	0.139	0.271	-0.019	0.824	0.396	0.383	0.111
cr1	-0.044	0.032	0.121	0.190	0.442	0.950	0.652	0.040
cr2	0.021	0.026	0.137	0.085	0.408	0.718	0.478	0.231
ar1	-0.057	0.089	0.119	0.178	0.389	0.652	0.940	0.119
ar2	-0.015	0.073	0.199	0.116	0.489	0.562	0.851	0.27
br1	-0.007	0.050	0.162	0.007	0.385	0.445	0.420	0.114
br2	0.031	0.137	0.166	0.087	0.377	0.464	0.542	0.415
br4	-0.101	-0.044	-0.015	0.229	0.007	0.006	0.100	0.883
br5	-0.037	-0.024	0.121	0.184	0.127	-0.005	0.021	0.830

Table C3. Cross loadings table for Study 1

	Presence	Purpose	Practice	Cognitive evaluation	Affective evaluation
pre1	0.705	0.331	0.370	0.198	0.176
pre2	0.756	0.357	0.274	0.189	0.035
pre3	0.770	0.338	0.259	0.209	0.037
pre4	0.731	0.375	0.308	0.224	0.128
pre5	0.745	0.446	0.347	0.188	0.094
pur1	0.320	0.779	0.228	0.118	0.147
pur2	0.405	0.829	0.275	0.170	0.096
pur3	0.430	0.802	0.291	0.130	0.114
pra1	0.418	0.304	0.816	0.164	0.281
pra2	0.318	0.227	0.804	0.172	0.342

pra3	0.394	0.246	0.877	0.172	0.306
pra4	0.319	0.311	0.811	0.134	0.282
cc1	0.220	0.117	0.128	0.838	0.072
cc2	0.238	0.085	0.158	0.859	0.045
cc3	0.241	0.078	0.081	0.881	-0.009
cc4	0.216	0.055	0.070	0.882	-0.004
it1	0.125	0.114	0.349	0.191	0.837
it2	0.092	0.118	0.350	0.184	0.862
it3	0.145	0.146	0.259	0.157	0.801
it4	0.126	0.116	0.254	0.131	0.756
it5	0.102	0.111	0.308	0.131	0.849
it6	0.102	0.140	0.271	0.141	0.824

Table C4. Construct Reliability Analysis (Cronbach's Alpha and Composite Reliability) for Study 1

	Cronbach's Alpha	Composite Reliability
Presence	0.796	0.859
Purpose	0.725	0.845
Practice	0.847	0.897
Cognitive evaluations	0.888	0.923
Affective evaluations	0.905	0.926
CR	0.634	0.827
AR	0.766	0.891
BR	0.525	0.682

Table C5. Construct Convergent Validity (AVE) for Study 1

	Average Variance Extracted (AVE)

Presence	0.550
Purpose	0.646
Practice	0.685
Cognitive evaluations	0.749
Affective evaluations	0.676
CR	0.709
AR	0.804
BR	0.413

Table C6. Discriminant Validity—Fornell and Larcker Criterion for Study 1

	presence	purpose	practice	Cognitive evaluation	Affective evaluation	CR	AR	BR
presence	**0.742**							
purpose	0.499	**0.804**						
practice	0.423	0.329	**0.828**					
Cognitive evaluation	-0.252	-0.106	-0.126	**0.866**				
Affective evaluation	0.131	0.149	0.368	-0.029	**0.822**			
CR	-0.027	0.034	0.143	0.179	0.491	**0.842**		
AR	-0.044	0.091	0.166	0.170	0.472	0.681	**0.897**	
BR	-0.070	-0.006	0.088	0.239	0.155	0.113	0.197	**0.643**

Table C7. Results for Structural Equation Model for Study 1

	Original Sample	Sample Mean	Standard Deviation	T Statistics	P Values
AIA -> Projection	0.326	0.250	0.225	1.449	0.074
Projection -> Cognitive Reaction	0.528	0.528	0.031	17.221	0.000
Projection -> Affective Reaction	0.507	0.508	0.034	14.863	0.000

Projection -> Behavioral Reaction	0.230	0.230	0.050	4.565	0.000

With control variables: age, gender, income, education, children, and political affiliation.

Table C8. A complete list of items for the constructs in Study 1

Construct	Dimension	Item code	Item wording
AIA (aggregate second order)	Presence		When I am home (at my friend's home, in my office, in my client's office),
		Pre1	I know there are AI-powered smart technologies even though I do not see them.
		Pre2	I know that AI-powered smart technologies (e.g., virtual assistants) are listening to me.
		Pre3	I am conscious that AI-powered smart technologies (e.g., smart devices with sensors) are monitoring me.
		Pre4	I am immediately aware of the existence of AI-powered smart technologies.
		Pre5	I know that I am surrounded by AI-powered smart technologies.
	Purpose	Pur1	I am aware of the predictive features of AI-powered smart technologies.
		Pur2	I know the recommending features of AI-powered smart technologies.
		Pur3	I know how to prevent AI-powered smart technologies from collecting data if I want to.
	Practice	Pra1	I use several AI-powered smart technologies.
		Prac2	I use AI-powered smart technologies to manage different things, such as creating predictive shopping lists, controlling room temperature through a thermostat, and using a smart vacuum.
		Prac3	I interact with different types of AI-powered smart technologies.
		Prac4	I use AI-powered smart technologies without thinking too much about them.
Projection (aggregate second order)	Cognitive evaluation	Cc1*	*I am concerned that the information I provide to virtual assistants could be misused.*

		Cc2*	*I am concerned that a person can find my private information via my virtual assistant.*
		Cc3*	*I am concerned about providing information to virtual assistants, because of what the companies or others might do with it.*
		Cc4*	*I am concerned about providing information to virtual assistants, because it could be used in a way I cannot foresee.*
	Affective evaluation		Thinking about myself in relation to virtual assistants,
		It1	I am dependent on them.
		It2	I am reliant on using them.
		It3	I am energized by using them.
		It4	I am enthusiastic about using them.
		It5	I am linked with them.
		It6	I am connected with them.
Cognitive reactions (reflective construct)			Previously, we said that virtual assistants are listening to you non-stop. Imagine that you notice it turning on the music when you are talking on the phone nearby. Please indicate the extent to which you agree with the following statements.
		Cr1	Virtual assistants are so wonderful that I do not care about the incident that just happened.
		Cr2	Virtual assistants are helpful despite the incident that just happened.
Affective reactions (reflective construct)			We have described how virtual assistants are listening to you non-stop. Imagine you hear your virtual assistant start talking when you are on the phone with your friends (triggered accidentally by hearing the keywords). Please indicate the extent to which you agree with the following statements.
		Ar1	Using virtual assistants is so joyful that I do not care about the incident that just happened.
		Ar2	Using virtual assistants is enjoyable despite the incident that just happened.
Behavioral reactions (reflective construct)			We have explained that virtual assistants are listening to you non-stop. Imagine that when you are watching TV, your virtual assistant starts reacting to phrases from your TV. Please indicate the extent to which you agree with the following statements.
		Br1	I spend more time exploring different functions of virtual assistants despite the incident.

Br2	I ignore the incident and continue using virtual assistants as before.
Br4*	*I unplug virtual assistants and only plug them in when needed.*
Br5*	*I unplug virtual assistants and stop using them.*

* Indicates reverse coding item.

Table C9. Pre-test results for Study 1

	N	Minimum	Maximum	Mean	Std. Deviation	Skewness		Kurtosis	
	Statistic	Statistic	Statistic	Statistic	Statistic	Statistic	Std. Error	Statistic	Std. Error
pre1	531	1	5	3.72	1.006	-.535	.106	-.196	.212
pre2	531	1	5	3.86	1.010	-.586	.106	-.275	.212
pre3	531	1	5	3.67	1.125	-.582	.106	-.426	.212
pre4	531	1	5	3.52	1.123	-.367	.106	-.595	.212
pre5	531	1	5	3.91	1.071	-.807	.106	-.101	.212
pre6	531	1	5	3.69	1.034	-.402	.106	-.457	.212
pur1	531	1	5	3.19	1.252	-.287	.106	-1.052	.212
pur2	531	1	5	3.73	1.047	-.742	.106	.006	.212
pur3	531	1	5	3.67	1.054	-.668	.106	-.128	.212
pur4	531	1	5	3.15	1.195	-.217	.106	-.914	.212
pra1	531	1	5	3.81	.989	-.617	.106	-.312	.212
pra2	531	1	5	3.40	1.178	-.381	.106	-.779	.212
pra3	531	1	5	3.75	1.044	-.603	.106	-.389	.212
pra4	531	1	5	3.71	1.061	-.612	.106	-.269	.212
cc1	531	1	5	2.18	.938	.703	.106	.294	.212
cc2	531	1	5	2.10	.965	.652	.106	-.103	.212
cc3	531	1	5	2.14	.974	.656	.106	-.085	.212
cc4	531	1	5	2.09	.958	.693	.106	-.002	.212

ct1	531	1	5	2.75	.975	.077	.106	-.585	.212
ct2	531	1	5	3.08	1.050	-.296	.106	-.610	.212
ct3	531	1	5	3.06	.961	-.258	.106	-.183	.212
it1	531	1	5	2.82	1.254	-.085	.106	-1.221	.212
it2	531	1	5	2.98	1.235	-.217	.106	-1.080	.212
it3	531	1	5	2.79	1.145	.015	.106	-.847	.212
it4	531	1	5	3.21	1.138	-.382	.106	-.563	.212
it5	531	1	5	3.05	1.200	-.271	.106	-.888	.212
it6	531	1	5	3.17	1.223	-.383	.106	-.849	.212
cr1	531	1	5	2.10	1.024	.663	.106	-.331	.212
cr2	531	1	5	2.94	1.083	-.287	.106	-.881	.212
cr3	531	1	5	3.60	1.014	-.646	.106	.254	.212
ar1	531	1	5	2.29	1.066	.525	.106	-.505	.212
ar2	531	1	5	2.78	1.118	-.021	.106	-.926	.212
ar3	531	1	5	3.60	1.100	-.818	.106	.120	.212
br1	531	1	5	2.94	1.042	-.255	.106	-.740	.212
br2	531	1	5	2.80	1.109	.056	.106	-.826	.212
br3	531	1	5	3.30	.987	-.596	.106	-.273	.212
br4	531	1	5	2.75	1.216	.276	.106	-.895	.212
br5	531	1	5	3.24	1.234	-.156	.106	-.922	.212

Table C10. Nonresponse bias test for Study 1

		N	Mean	Std. Deviation	Std. Error Mean	t	Sig.(2-tailed)
Pair 1	pree1 - prel1	60	.08333	1.73978	.22460	.371	.712
Pair 2	pree2 - prel2	60	.06667	1.47138	.18995	.351	.727

Pair 3	pree3 - prel3	60	.05000	1.47780	.19078	.262	.794
Pair 4	pree4 - prel4	60	.01667	1.35911	.17546	.095	.925
Pair 5	pree5 - prel5	60	.01667	1.89103	.24413	.068	.946
Pair 6	pure1 - purl1	60	-.15000	1.83030	.23629	-.635	.528
Pair 7	pure2 - purl2	60	-.01667	1.40811	.18179	-.092	.927
Pair 8	pure3 - purl3	60	-.11667	1.34154	.17319	-.674	.503
Pair 9	prace1 - pracl1	60	-.15000	1.62423	.20969	-.715	.477
Pair 10	prace2 - pracl2	60	.05000	1.78909	.23097	.216	.829
Pair 11	prace3 - peacl3	60	.00000	1.70741	.22043	.000	1.000
Pair 12	prace4 - pracl4	60	-.16667	1.61735	.20880	-.798	.428
Pair 13	cce1 - ccl1	60	.11667	1.48543	.19177	.608	.545
Pair 14	cce2 - ccl2	60	.10000	1.51490	.19557	.511	.611
Pair 15	cce3 - ccl3	60	.08333	1.54362	.19928	.418	.677
Pair 16	cce4 - ccl4	60	-.10000	1.51490	.19557	-.511	.611
Pair 17	ite1 - itl1	60	-.70000	1.60824	.20762	-3.371	.001
Pair 18	ite2 - itl2	60	-.75000	1.54728	.19975	-3.755	.000
Pair 19	ite3 - itl3	60	-.75000	1.43356	.18507	-4.052	.000
Pair 20	ite4 - itl4	60	-.90000	1.42258	.18365	-4.901	.000
Pair 21	ite5 - itl5	60	-.58333	1.60815	.20761	-2.810	.007
Pair 22	ite6 - itl6	60	-.68333	1.58907	.20515	-3.331	.001
Pair 23	cre1 - crl1	60	-.38333	1.37892	.17802	-2.153	.035
Pair 24	cre2 - crl2	60	-.58333	1.51032	.19498	-2.992	.004

Pair 25	cre3 - crl3	60	-.46667	1.21386	.15671	-2.978	.004
Pair 26	are1 - arl1	60	-.25000	1.59049	.20533	-1.218	.228
Pair 27	are2 - arl2	60	-.55000	1.54509	.19947	-2.757	.008
Pair 28	are3 - arl3	60	-.51667	1.64153	.21192	-2.438	.018
Pair 29	bre1 - brl1	60	-.26667	1.45982	.18846	-1.415	.162
Pair 30	bre2 - brl2	60	-.58333	1.66001	.21431	-2.722	.009
Pair 31	bre3 - brl3	60	-.30000	1.38148	.17835	-1.682	.098
Pair 32	bre4 - brl4	60	.26667	1.58239	.20429	1.305	.197
Pair 33	bre5 - b4l5	60	-.15000	1.69571	.21891	-.685	.496

APPENDIX D

Table D1. Participant characteristics for Study 2

Demographics		Frequency	Percentage
Age			
	18–24	153	56.7
	25–34	89	33.0
	35–44	24	8.9
	45–54	2	0.7
	55–64	1	0.4
Gender			
	Female	121	44.8
	Male	143	53.0
	Prefer not to answer	4	1.8
Education			
	High school	47	17.4
	Associate degree	16	5.9
	Some college	60	22.2
	College	99	36.7
	Master	41	15.2
	Doctoral, JD, MD	5	1.9
Income			
	Less than $10,000	63	23.3
	$10,000–$19,999	61	22.6
	$20,000–$29,999	46	17.0
	$30,000–$39,999	26	9.6
	$40,000–$49,999	15	5.6
	$50,000–$59,999	16	5.9
	$60,000–$69,999	9	3.3
	$70,000–$79,999	5	1.9
	$80,000–$89,999	3	1.1
	$90,000–$99,999	3	1.1
	$100,000–$149,999	2	0.7
	More than $149,999	2	0.7
	Prefer not to answer	18	6.7
Length of AI-powered smart technology uses			
	Less than one year	30	11.1
	One to three years	70	25.9
	Three to five years	57	21.1
	More than five years	103	38.1
	Cannot recall	9	3.3
Game score			
	Below five	19	7.0

	Between five and ten	153	56.7
	Above ten	97	35.9
Political affiliate			
	Democrat	93	34.4
	Republican	22	8.1
	Independent	61	22.6
	Something else	93	34.4
Children			
	No	198	73.3
	One	62	23.0
	More than one	9	3.3

Table D2. Cross loading table for Study 2

	Presence	Purpose	Practice	Cog Eva	Aff Eva	CR	AR	BR
Pre1	0.542	0.192	0.232	0.038	0.131	0.006	0.040	-0.070
Pre2	0.516	0.187	0.207	0.068	0.115	-0.036	-0.016	0.009
Pre3	0.906	0.016	0.301	0.046	0.223	0.085	0.078	-0.106
Pre4	0.501	0.257	0.357	0.021	0.125	-0.034	0.006	-0.038
pur1	0.443	-0.105	0.139	0.133	0.081	-0.030	-0.029	-0.021
pur2	0.245	0.481	0.266	-0.113	0.077	0.012	0.068	-0.073
pur3	0.259	0.910	0.224	-0.113	0.236	0.071	0.099	-0.077
pra1	0.405	0.215	0.694	0.050	0.323	0.206	0.163	-0.236
pra2	0.274	0.157	0.943	0.035	0.443	0.214	0.138	-0.145
pra3	0.294	0.207	0.813	0.073	0.377	0.223	0.205	-0.207
pra4	0.295	0.133	0.676	0.026	0.317	0.199	0.140	-0.142
cc1	0.046	-0.101	0.086	0.791	-0.052	-0.140	-0.143	0.180
cc2	0.104	-0.142	0.169	0.715	0.102	-0.077	-0.093	0.063
cc3	0.029	-0.191	-0.037	0.871	-0.080	-0.020	-0.121	0.269
cc4	0.066	-0.163	-0.011	0.871	-0.053	-0.072	-0.111	0.228
IT1	0.183	0.086	0.358	-0.006	0.696	0.333	0.281	-0.165
IT2	0.217	0.183	0.325	-0.044	0.707	0.335	0.343	-0.328
IT3	0.133	0.154	0.35	-0.068	0.790	0.375	0.400	-0.316
IT4	0.193	0.179	0.363	-0.059	0.731	0.352	0.436	-0.378
IT5	0.191	0.144	0.377	-0.001	0.847	0.408	0.334	-0.28
IT6	0.185	0.186	0.367	0.023	0.795	0.348	0.270	-0.205
CR1	0.059	0.121	0.163	-0.118	0.332	0.769	0.481	-0.255
CR2	0.044	0.026	0.237	-0.04	0.429	0.857	0.619	-0.476
AR1	0.083	0.136	0.118	-0.161	0.359	0.603	0.760	-0.25
AR2	0.054	0.002	0.078	-0.110	0.316	0.639	0.844	-0.457
AR3	0.002	0.112	0.202	-0.026	0.313	0.195	0.545	-0.217

BR1	0.104	0.102	0.149	-0.112	0.366	0.374	0.345	0.727
BR2	0.019	0.006	0.137	-0.165	0.209	0.409	0.379	0.690
BR3	-0.098	-0.091	-0.129	0.218	-0.146	-0.284	-0.234	0.621
BR4	-0.045	-0.006	-0.127	0.193	-0.315	-0.277	-0.276	0.787

Table D3. Discriminant Validity for reflective constructs—Fornell and Larcker Criterion for Study 2

	Affective evaluation	Cognitive evaluation	Cognitive reaction	Affective reaction	Behavio ral reaction
Affective evaluation	**0.763**				
Cognitive evaluation	0.036	**0.815**			
Cognitive reaction	0.472	-0.091	**0.815**		
Affective reaction	0.458	-0.144	0.681	**0.728**	
Behavioral reaction	0.385	-0.233	0.468	0.434	**0.709**

Table D4. Structural Model for AIA-Projection-Reactions in Study 2

	Original Sample	**Sample Mean**	**Standard Deviation**	**T Statistics**	**P Values**
AIA -> Projection	0.473	0.480	0.050	9.526	0.000
Projection -> Cognitive Reaction	0.495	0.479	0.059	8.344	0.000
Projection -> Affective Reaction	0.490	0.476	0.053	8.584	0.000
Projection -> Behavioral Reaction	0.438	0.415	0.057	7.678	0.000

With control variables: age, gender, income, education, children, and political affiliation.

Table D5. Full comparisons table for Study 2

Dependent Variable	(I) Group	(J) Group	Mean Difference (I-J)	Std. Error	Sig.	95% Confidence Interval Lower Bound	Upper Bound
AIA	HomeFamiliar	HomeUnfamiliar	2.80180	1.16110	0.077	-.2001	5.8037
		OfficeFamiliar	3.83824	1.15679	0.006*	0.8475	6.8290
		OfficeUnfamiliar	4.41578	1.16553	0.001*	1.4024	7.4291
	HomeUnfamiliar	HomeFamiliar	-2.80180	1.16110	0.077	-5.8037	0.2001
		OfficeFamiliar	1.03644	1.16110	0.809	-1.9655	4.0384
		OfficeUnfamiliar	1.61398	1.16980	0.513	-1.4104	4.6384
	OfficeFamiliar	HomeFamiliar	-3.83824	1.15679	0.006*	-6.8290	-.8475
		HomeUnfamiliar	-1.03644	1.16110	0.809	-4.0384	1.9655
		OfficeUnfamiliar	0.57754	1.16553	0.960	-2.4358	3.5909
	OfficeUnfamiliar	HomeFamiliar	-4.41578	1.16553	0.001*	-7.4291	-1.4024
		HomeUnfamiliar	-1.61398	1.16980	0.513	-4.6384	1.4104
		OfficeFamiliar	-0.57754	1.16553	0.960	-3.5909	2.4358
Presence	HomeFamiliar	HomeUnfamiliar	0.79763	0.53353	0.442	-0.5818	2.1770
		OfficeFamiliar	1.10294	0.53155	0.164	-0.2713	2.4772
		OfficeUnfamiliar	1.25579	0.53556	0.091	-0.1289	2.6404
	HomeUnfamiliar	HomeFamiliar	-0.79763	0.53353	0.442	-2.1770	0.5818
		OfficeFamiliar	0.30531	0.53353	0.940	-1.0741	1.6847
		OfficeUnfamiliar	0.45816	0.53753	0.829	-0.9316	1.8479
	OfficeFamiliar	HomeFamiliar	-1.10294	0.53155	0.164	-2.4772	0.2713
		HomeUnfamiliar	-0.30531	0.53353	0.940	-1.6847	1.0741
		OfficeUnfamiliar	0.15285	0.53556	0.992	-1.2318	1.5375
	OfficeUnfamiliar	HomeFamiliar	-1.25579	0.53556	0.091	-2.6404	0.1289
		HomeUnfamiliar	-0.45816	0.53753	0.829	-1.8479	0.9316
		OfficeFamiliar	-0.15285	0.53556	0.992	-1.5375	1.2318
Purpose	HomeFamiliar	HomeUnfamiliar	0.97673	0.37862	0.051	-0.0022	1.9556
		OfficeFamiliar	0.72059	0.37721	0.226	-0.2547	1.6958
		OfficeUnfamiliar	1.16488	0.38006	0.013*	0.1823	2.1475
	HomeUnfamiliar	HomeFamiliar	-0.97673	0.37862	0.051	-1.9556	0.0022
		OfficeFamiliar	-0.25615	0.37862	0.906	-1.2350	0.7227
		OfficeUnfamiliar	0.18815	0.38146	0.961	-0.7981	1.1744
	OfficeFamiliar	HomeFamiliar	-0.72059	0.37721	0.226	-1.6958	0.2547
		HomeUnfamiliar	0.25615	0.37862	0.906	-0.7227	1.2350
		OfficeUnfamiliar	0.44430	0.38006	0.647	-0.5383	1.4269
	OfficeUnfamiliar	HomeFamiliar	-1.16488	0.38006	0.013*	-2.1475	-0.1823
		HomeUnfamiliar	-0.18815	0.38146	0.961	-1.1744	0.7981
		OfficeFamiliar	-0.44430	0.38006	0.647	-1.4269	0.5383
Practice	HomeFamiliar	HomeUnfamiliar	1.02744	0.60530	0.327	-0.5375	2.5924
		OfficeFamiliar	2.01471	0.60305	0.005*	0.4556	3.5738
		OfficeUnfamiliar	1.99510	0.60761	0.006*	0.4242	3.5660
	HomeUnfamiliar	HomeFamiliar	-1.02744	0.60530	0.327	-2.5924	0.5375
		OfficeFamiliar	0.98727	0.60530	0.363	-0.5777	2.5522

	OfficeUnfamiliar	0.96766	0.60984	0.388	-0.6090	2.5443
OfficeFamiliar	HomeFamiliar	-2.01471	0.60305	0.005*	-3.5738	-0.4556
	HomeUnfamiliar	-0.98727	0.60530	0.363	-2.5522	0.5777
	OfficeUnfamiliar	-0.01961	0.60761	1.000	-1.5905	1.5513
OfficeUnfamiliar	HomeFamiliar	-1.99510	0.60761	0.006*	-3.5660	-0.4242
	HomeUnfamiliar	-0.96766	0.60984	0.388	-2.5443	0.6090
	OfficeFamiliar	0.01961	0.60761	1.000	-1.5513	1.5905

* The mean difference is significant at the 0.05 level.

Table D6. A complete list of items for the constructs in Study 2

Construct	Dimension	Item code	Item wording
AIA (aggregate second order)	Presence		When I am home (at my friend's home, in my office, in my client's office),
		Pre1	I know there are AI-powered smart technologies even though I do not see them.
		Pre2	I know that AI-powered smart technologies (e.g., virtual assistants) are listening to me.
		Pre3	I am conscious that AI-powered smart technologies (e.g., smart devices with sensors) are monitoring me.
		Pre4	I am immediately aware of the existence of AI-powered smart technologies.
		Pre5	I know that I am surrounded by AI-powered smart technologies.
	Purpose	Pur1	I am aware of the predictive features of AI-powered smart technologies.
		Pur2	I know the recommending features of AI-powered smart technologies.
		Pur3	I know how to prevent AI-powered smart technologies from collecting data if I want to.
	Practice	Pra1	I use several AI-powered smart technologies.
		Prac2	I use AI-powered smart technologies to manage different things, such as creating predictive shopping lists, controlling room temperature through a thermostat, and using a smart vacuum.
		Prac3	I interact with different types of AI-powered smart technologies.
		Prac4	I use AI-powered smart technologies without thinking too much about them.
Projection (aggregate second order)	Cognitive evaluation	Cc1*	*I am concerned that the information I provide to virtual assistants could be misused.*
		Cc2*	*I am concerned that a person can find my private information via my virtual assistant.*

		Cc3*	*I am concerned about providing information to virtual assistants, because of what the companies or others might do with it.*
		Cc4*	*I am concerned about providing information to virtual assistants, because it could be used in a way I cannot foresee.*
	Affective evaluation		Thinking about myself in relation to virtual assistants,
		It1	I am dependent on them.
		It2	I am reliant on using them.
		It3	I am energized by using them.
		It4	I am enthusiastic about using them.
		It5	I am linked with them.
		It6	I am connected with them.
Cognitive reactions (reflective construct)			Previously, we said that virtual assistants are listening to you non-stop. Imagine that you notice it turning on the music when you are talking on the phone nearby. Please indicate the extent to which you agree with the following statements.
		Cr1	Virtual assistants are so wonderful that I do not care about the incident that just happened.
		Cr2	Virtual assistants are helpful despite the incident that just happened.
Affective reactions (reflective construct)			We have described how virtual assistants are listening to you non-stop. Imagine you hear your virtual assistant start talking when you are on the phone with your friends (triggered accidentally by hearing the keywords). Please indicate the extent to which you agree with the following statements.
		Ar1	Using virtual assistants is so joyful that I do not care about the incidents that just happened.
		Ar2	Using virtual assistants is enjoyable despite the incident that just happened.
Behavioral reactions (reflective construct)			We have explained that virtual assistants are listening to you non-stop. Imagine when you are watching TV, your virtual assistant starts reacting to phrases from your TV. Please indicate the extent to which you agree with the following statements.
		Br1	I spend more time exploring different functions of virtual assistants despite the incident.
		Br2	I ignore the incident and continue using virtual assistants as before.

	Br3*	*I unplug virtual assistants and only plug them in when needed.*
	Br4*	*I unplug virtual assistants and stop using them.*

* Indicates reverse coding item.

Table D7. Pre-test results for Study 2

	N	Minimum	Maximum	Mean	Std. Deviation	Skewness		Kurtosis	
	Statistic	Statistic	Statistic	Statistic	Statistic	Statistic	Std. Error	Statistic	Std. Error
Pre1	269	1.00	5.00	3.3643	1.15626	-.279	.149	-.816	.296
Pre2	269	1.00	5.00	3.3829	1.13880	-.319	.149	-.766	.296
Pre3	269	1.00	5.00	3.2045	1.12262	-.203	.149	-.664	.296
Pre4	269	1.00	5.00	3.8216	.94915	-.638	.149	.031	.296
Pur1	269	1.00	5.00	3.6840	.99653	-.814	.149	.279	.296
Pur2	269	1.00	5.00	3.5651	.98138	-.541	.149	-.279	.296
Pur3	269	1.00	5.00	3.5985	.96320	-.560	.149	-.113	.296
Pra1	269	1.00	5.00	3.3086	1.04630	-.034	.149	-1.028	.296
Pra2	269	1.00	5.00	2.9703	1.17778	.155	.149	-.975	.296
Pra3	269	1.00	5.00	3.2788	1.08258	-.058	.149	-1.021	.296
Pra4	269	1.00	5.00	3.3494	1.07750	-.137	.149	-.804	.296
CC1	269	1.00	5.00	3.7100	1.03553	-.594	.149	-.500	.296
CC2	269	1.00	5.00	3.7361	1.07596	-.725	.149	-.186	.296
CC3	269	1.00	5.00	3.6357	1.06907	-.653	.149	-.264	.296
CC4	269	1.00	5.00	3.7398	1.06467	-.754	.149	-.096	.296
IT1	269	1.00	5.00	2.5316	1.20475	.448	.149	-.858	.296
IT2	269	1.00	5.00	2.8290	1.17520	.003	.149	-1.110	.296
IT3	269	1.00	5.00	2.8587	1.13399	-.091	.149	-.817	.296
IT4	269	1.00	5.00	3.4870	1.06716	-.680	.149	-.139	.296
IT5	269	1.00	5.00	2.9591	1.14369	-.116	.149	-.911	.296
IT6	269	1.00	5.00	3.1338	1.09814	-.336	.149	-.776	.296
CR1	269	1.00	5.00	2.0892	1.01456	.727	.149	-.265	.296
CR2	269	1.00	5.00	3.2900	1.06747	-.415	.149	-.519	.296
AR1	269	1.00	5.00	2.2119	1.06316	.544	.149	-.628	.296
AR2	269	1.00	5.00	2.9405	1.11477	-.191	.149	-.993	.296
AR3	269	1.00	5.00	3.8476	1.01986	-.881	.149	.431	.296
BR1	269	1.00	5.00	3.0632	1.06842	-.238	.149	-.834	.296
BR2	269	1.00	5.00	2.8253	1.10425	-.001	.149	-1.005	.296
BR3	269	1.00	5.00	3.0743	1.27331	-.206	.149	-1.084	.296
BR4	269	1.00	5.00	2.1561	1.11543	.809	.149	-.025	.296

APPENDIX E

THE UNIVERSITY OF ALABAMA | Office of the Vice President for Research & Economic Development
Office for Research Compliance

May 20, 2021

Ning Yang, MA
Department of Information Systems, Statistics, and Management Science
Culverhouse College of Business
The University of Alabama
Box 870226

Re: IRB # 20-03-3465-R1 "The Technology that Rocks the Cradle: Introducing AI Awareness"

Dear Ms. Yang:

The University of Alabama Institutional Review Board has granted approval for your renewal/amendment request. Your renewal application has been given exempt approval according to 45 CFR part 46.104(d)(2) as outlined below:

(2) Research that only includes interactions involving educational tests (cognitive, diagnostic, aptitude, achievement), survey procedures, interview procedures, or observation of public behavior (including visual or auditory recording) if at least one of the following criteria is met: (i) The information obtained is recorded by the investigator in such a manner that the identity of the human subjects cannot readily be ascertained, directly or through identifiers linked to the subjects.

The approval for your application will lapse on May 19, 2022. If your research will continue beyond this date, please submit the annual report to the IRB as required by University policy before the lapse. Please note, any modifications made in research design, methodology, or procedures must be submitted to and approved by the IRB before implementation. Please submit a final report form when the study is complete.

Please use reproductions of the IRB approved informed information sheet to provide to your participants.

Good luck with your research.

Sincerely,

Carpantato T. Myles, MSM, CIM, CIP
Director & Research Compliance Officer

Jessup Building | Box 870127 | Tuscaloosa, AL 35487-0127
205-348-8461 | Fax 205-348-7189 | Toll Free 1-877-820-3066

Informed Consent

Please read this informed consent carefully before you decide to participate in the study.

Consent Form Key Information:

- Participate in a 8-10 minute survey about awareness of AI-powered smart technology
- Survey questions are related to AI-powered smart technology uses at your house, or at work, or at other locations
- No information collected will be linked to your identity

Purpose of the research study: The purpose of the study is to capture people's awareness of smart technology. We believe that awareness of smart technologies, especially AI-powered smart technologies, could help us to explain the variances in people's reactions to stimuli from the environment and the differences in their decisions and behaviors relating to smart technology uses.

What you will do in the study: Before you move to the actual study, you need to agree to participate reading the electronic consent form. You will be asked to follow the instructions and answer the questions as directed. There will be no open-ended questions or questions that require you to provide detailed information. Most questions are related to your AI-powered smart technology uses and your thoughts on it. You cannot skip any of the questions, but you can exit the survey at any moment if you are not comfortable. You have the right to stop at any time.

Time required: The study will require no more than 10 minutes of your time.

Risks: There are no anticipated risks involved in this study. However, some people might feel uncomfortable when they recall their prior unpleasant experiences with AI-powered smart technologies.

Benefits: You will get paid about 0.5 dollars for participating in this research study. The study may help us understand the degree to which people are aware that AI-powered smart technologies enable, support, monitor, or even direct their daily life. It is possible that this study will make you more aware of the existence, practices, functions, and purposes of AI-powered smart technologies that you engage with on a daily basis. Therefore, you might become clearer on your decisions and your behaviors related to smart technology uses.

Confidentiality: We will keep all electronic files in a password protected folder. We will not ask for sensitive personal information that can be linked to your name. Your MTurk ID will not be linked to the survey. No personal information will be collected other than general demographic information.

Voluntary participation: Your participation in the study is completely voluntary.

UNIVERSITY OF ALABAMA IRB
CONSENT FORM APPROVED: 5-20-21
EXPIRATION DATE: 5-19-22

Right to withdraw from the study: You have the right to withdraw from the study at any time without penalty. Your survey will be deleted if you decide to withdraw.

How to withdraw from the study: You have the right to withdraw from the study at any time. If you want to withdraw from the study during the survey, you can exit at any time. If you want to withdraw from the study after you finish the survey and before the study being published, you can email us or call us. We will remove you from the study and destroy your data immediately. If you would like to withdraw after your survey has been submitted, please contact us.

Compensation/Reimbursement: You will receive about 0.5 dollars for participating in the study. We do appreciate your help and your time!

If you have questions about the study or need to report a study related issue please contact, contact:

Name of Principal Investigator: Ning Yang
Title: MS
Department Name: Department of Information Systems, Statistics, and Management Science (ISM)
Telephone: 205-826-2312
Email address: nyang@crimson.ua.edu

Faculty Advisor's Name: Dr. Gregory Bott
Department Name: Department of ISM
Telephone: 205-348-7129
Email address: gjbott@cbs.ua.edu

If you have questions about your rights as a participant in a research study, would like to make suggestions or file complaints and concerns about the research study, please contact:
Ms. Tanta Myles, the University of Alabama Research Compliance Officer at (205)-348-8461 or toll-free at 1-877-820-3066. You may also ask questions, make suggestions, or file complaints and concerns through the IRB Outreach Website at http://ovpred.ua.edu/research-compliance/prco/. You may email the Office for Research Compliance at rscompliance@research.ua.edu.

Agreement:

Thank you very much for your consideration. Proceeding to the attached survey constitutes your consent to participate.

UNIVERSITY OF ALABAMA IRB
CONSENT FORM APPROVED: 5-20-21
EXPIRATION DATE: 5-19-22